THIS DRAWING IS COPYRIGHT - ELECTRONIC DRAWING FILE

NOTES:

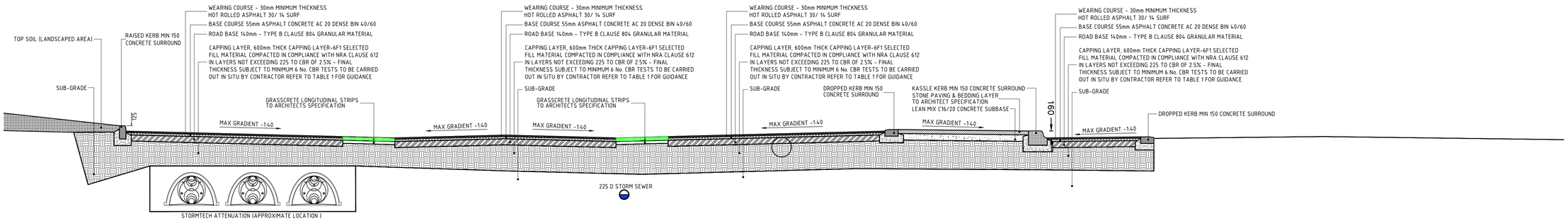

SECTION A-A

1:50

SC-740 TECHNICAL SPECIFICATION
NTS

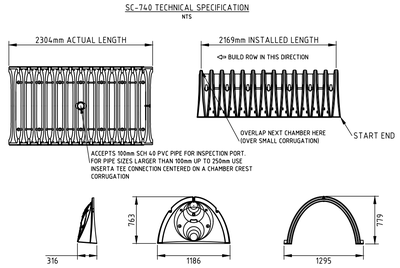

NOMINAL CHAMBER SPECIFICATIONS

SIZE (W X H X INSTALLED LENGTH)	1295mm x 762mm x 2169mm
CHAMBER STORAGE	1.30m³
MINIMUM INSTALLED STORAGE*	2.12m³
WEIGHT	33.6kg

*ASSUMES 152mm STONE ABOVE, BELOW, AND BETWEEN CHAMBERS

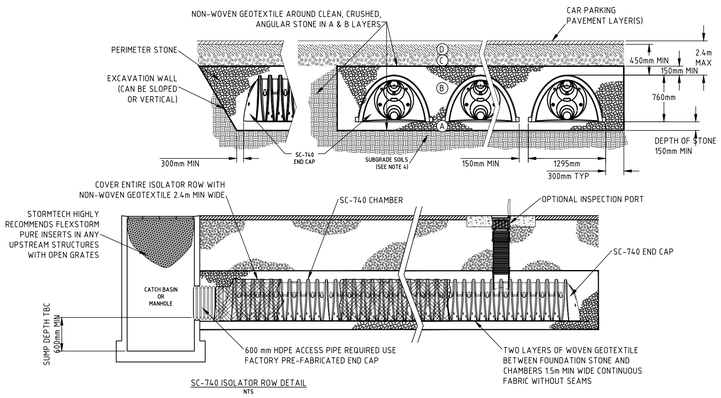

SC-740 ISOLATOR ROW DETAIL
NTS

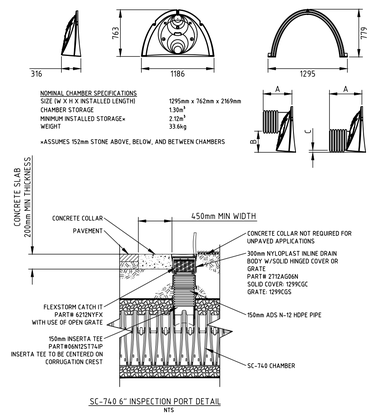

SC-740 6" INSPECTION PORT DETAIL
NTS

TYPICAL STORMTECH DETAILS AND SECTIONS

1:50

IMPORTANT - NOTES FOR THE BIDDING AND INSTALLATION OF THE SC-310/SC-740 SYSTEM

1. STORMTECH SC-310 & SC-740 CHAMBERS SHALL NOT BE INSTALLED UNTIL THE MANUFACTURER'S REPRESENTATIVE HAS COMPLETED A PRE-CONSTRUCTION MEETING WITH THE INSTALLERS.
2. STORMTECH SC-740 CHAMBERS SHALL BE INSTALLED IN ACCORDANCE WITH THE "STORMTECH SC-740 CONSTRUCTION GUIDE".
3. CHAMBERS ARE NOT TO BE BACKFILLED WITH A DOZER OR AN EXCAVATOR SITUATED OVER THE CHAMBERS.
   STORMTECH RECOMMENDS 3 BACKFILL METHODS:
   STONESHOOTER LOCATED OFF THE CHAMBER BED.
   BACKFILL AS ROWS ARE BUILT USING AN EXCAVATOR ON THE FOUNDATION STONE OR SUBGRADE.
   BACKFILL FROM OUTSIDE THE EXCAVATION USING A LONG BOOM HOE OR EXCAVATOR.
4. THE FOUNDATION STONE SHALL BE LEVELED AND COMPACTED PRIOR TO PLACING CHAMBERS.
5. JOINTS BETWEEN CHAMBERS SHALL BE PROPERLY SEATED PRIOR TO PLACING STONE.
6. MAINTAIN MINIMUM - 150mm SPACING BETWEEN THE CHAMBER ROWS.
7. EMBEDMENT STONE SURROUNDING CHAMBERS MUST BE A CLEAN, CRUSHED, ANGULAR STONE 20-50mm).
8. THE CONTRACTOR MUST REPORT ANY DISCREPANCIES WITH CHAMBER FOUNDATION MATERIALS BEARING CAPACITIES TO THE SITE DESIGN ENGINEER.
9. ADS RECOMMENDS THE USE OF "FLEXSTORM CATCH IT" INSERTS DURING CONSTRUCTION FOR ALL INLETS TO PROTECT THE SUBSURFACE STORMWATER MANAGEMENT SYSTEM FROM CONSTRUCTION SITE RUNOFF.

NOTES FOR CONSTRUCTION EQUIPMENT

1. STORMTECH SC-740 CHAMBERS SHALL BE INSTALLED IN ACCORDANCE WITH THE "STORMTECH SC-740 CONSTRUCTION GUIDE".
2. THE USE OF CONSTRUCTION EQUIPMENT OVER SC-310 & SC-740 CHAMBERS IS LIMITED:
   NO EQUIPMENT IS ALLOWED ON BARE CHAMBERS.
   NO RUBBER TIRED LOADERS, DUMP TRUCKS, OR EXCAVATORS ARE ALLOWED UNTIL PROPER FILL DEPTHS ARE REACHED IN ACCORDANCE WITH THE "STORMTECH SC-740 CONSTRUCTION GUIDE".
   WEIGHT LIMITS FOR CONSTRUCTION EQUIPMENT CAN BE FOUND IN THE "STORMTECH SC-740 CONSTRUCTION GUIDE".
3. FULL 900mm OF STABILIZED COVER MATERIALS OVER THE CHAMBERS IS REQUIRED FOR DUMP TRUCK TRAVEL OR DUMPING.

USE OF A DOZER TO PUSH EMBEDMENT STONE BETWEEN THE ROWS OF CHAMBERS MAY CAUSE DAMAGE TO THE CHAMBERS AND IS NOT AN ACCEPTABLE BACKFILL METHOD. ANY CHAMBERS DAMAGED BY THE "DUMP AND PUSH" METHOD ARE NOT COVERED UNDER THE STORMTECH STANDARD WARRANTY.

INSPECTION & MAINTENANCE

STEP 1) INSPECT ISOLATOR ROW FOR SEDIMENT

A. INSPECTION PORTS (IF PRESENT)
A.1. REMOVE/OPEN LID ON NYLOPLAST INLINE DRAIN
A.2. REMOVE AND CLEAN FLEXSTORM FILTER IF INSTALLED
A.3. USING A FLASHLIGHT AND STADIA ROD, MEASURE DEPTH OF SEDIMENT AND RECORD ON MAINTENANCE LOG
A.4. LOWER A CAMERA INTO ISOLATOR ROW FOR VISUAL INSPECTION OF SEDIMENT LEVELS (OPTIONAL)
A.5. IF SEDIMENT IS AT, OR ABOVE, 80mm PROCEED TO STEP 2. IF NOT, PROCEED TO STEP 3.
B. ALL ISOLATOR ROWS
B.1. REMOVE COVER FROM STRUCTURE AT UPSTREAM END OF ISOLATOR ROW
B.2. USING A FLASHLIGHT, INSPECT DOWN THE ISOLATOR ROW THROUGH OUTLET PIPE - MIRRORS ON POLES OR CAMERAS MAY BE USED TO AVOID A CONFINED SPACE ENTRY
B.3. IF SEDIMENT IS AT, OR ABOVE, 80mm PROCEED TO STEP 2. IF NOT, PROCEED TO STEP 3.

STEP 2) CLEAN OUT ISOLATOR ROW USING THE JETVAC PROCESS

A. A FIXED CULVERT CLEANING NOZZLE WITH REAR FACING SPREAD OF 1.1m OR MORE IS PREFERRED
B. APPLY MULTIPLE PASSES OF JETVAC UNTIL BACKFLUSH WATER IS CLEAN
C. VACUUM STRUCTURE SUMP AS REQUIRED

STEP 3) REPLACE ALL COVERS, GRATES, FILTERS, AND LIDS; RECORD OBSERVATIONS AND ACTIONS.

STEP 4) INSPECT AND CLEAN BASINS AND MANHOLES UPSTREAM OF THE STORMTECH SYSTEM.

NOTES

1. INSPECT EVERY 6 MONTHS DURING THE FIRST YEAR OF OPERATION. ADJUST THE INSPECTION INTERVAL BASED ON PREVIOUS OBSERVATIONS OF SEDIMENT ACCUMULATION AND HIGH WATER ELEVATIONS.
2. CONDUCT JETTING AND VACTORING ANNUALLY OR WHEN INSPECTION SHOWS THAT MAINTENANCE IS NECESSARY.

REV	DATE	DESCRIPTION	BY/CHKD/APPR

Client

LIMERICK CITY & COUNTY COUNCIL

PHM Consulting
Civil - Structural - Environmental
11 Mallow Street, Limerick, Ireland V94 WRN4
Tel.: +353 (0)61 576020 E-mail: info@phm.ie Web.: www.phm.ie

RATHKEALE GREENWAY
RATHKEALE
CO. LIMERICK
PROPOSED DRAINAGE DETAILS 2 OF 3

Drawn: PN	Scale: AS SHOWN	Project Number: 110-37	Rev.
Chkd.: EOD	Date: 5/10/21	Drawing Number: 102	A1
Apprd.: EOD	Status: PLANNING D1		