CRONIN SUTTON

COTTER

DUBLIN | LONDON | LIMERICK

Engineering Services Report

O'Connor Park,

Ardagh,

Co. Limerick.

Client: Limerick City & County Council (LCCC)

Job No. L099L

June 2022 Rev 1

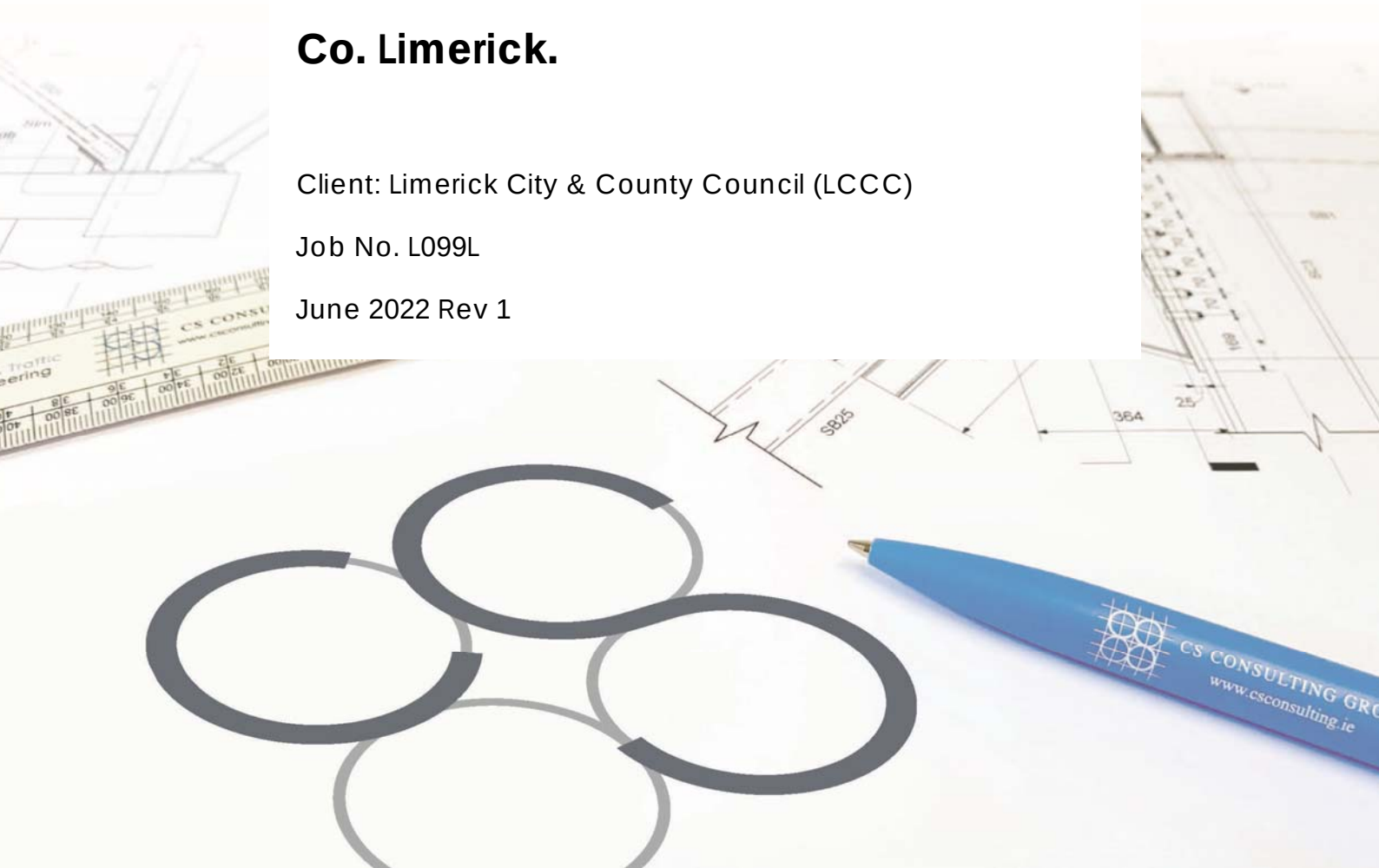

CS CONSULTING

GROUP

CS CONSULTING GROUP

ENGINEERING SERVICES REPORT

O'CONNOR PARK, ARDAGH, CO. LIMERICK.

CONTENTS

Document;	**Engineering Services Report - O'Connor Park, Ardagh, Co. Limerick.**

Job Ref.	Author	Reviewed By	Authorised By	Issue Date	Rev. No.
L099L	SC	GC	GC	25 May 2022	0
L099L	DF	RFM	COR	3 June 2022	1
L099L	DF	RFM	COR	22 June 2022	2

CS CONSULTING
GROUP

1.0 INTRODUCTION

Cronin Sutton Cotter Consulting Engineers have been commissioned by Limerick City & County Council to prepare an Engineering Services Report for the proposed build 10no. new dwellings in O'Connor Park, Ardagh, Co. Limerick. In preparing this report Cronin Sutton Cotter Consulting Engineers have made reference to the following:

- Ordnance Survey of Ireland (OSI) historic maps,
- Topographical Survey of the site,
- Irish Water Drainage Records provided by Limerick City and County Council (LCCC),
- Office of Public Works (OPW) Historic Flood Mapping & CFRAM study mapping available on www.floodinfo.ie.

2.0 SCOPE

Refer to the planning and architectural reports submitted as part of this application for a detailed description of the proposed works.

This report addresses the practical implications for the development of the subject lands. Addressed within is a review of the site's drainage/water supply/flood risk/traffic and a desk top review of past land uses and services in the area.

3.0 SITE DESCRIPTION

The proposed site is located in Ardagh, approximately 40km from Limerick City on the N21. The subject lands are directly adjacent to the rest of O'Connor Park, Ardagh, Co. Limerick which is located to the east of the proposed site. The site's topography is on a slight, ascending slope. See topographical survey attached within Appendix A. The area of the subject site is 0.56 Has as defined in red on Fig 2.0

The subject lands have never been developed before and appears to have been a greenfield site going back as far as prehistoric OSI mapping is available from.

The subject lands are located in the administrative jurisdiction of Limerick City and County Council. See Fig 1.0 below for site location in red. See Fig 2.0 for extract of Site Layout, full Site Layout drawing is attached within Appendix A.

Fig 1.0 – Site Location in red (Source Google Maps).

Fig 2.0 – Extract of Site Layout

4.0 FOUL DRAINAGE

4.1 Existing Foul Infrastructure

According to the GPR Survey, provided by LCCC (attached within Appendix B), the existing site is serviced by local authority foul sewer which runs along Dale Grove (runs into O'Connor Park at the 'T' junction) and is a 150mm uPVC Ø within O'Connor Park.

The existing main foul sewer, running parallel to the storm sewer, enters O'Connor Park under the east boundary access road (from Dale Road) and travels west along the access road to the edge the proposed site. This is shown in drawing L099L-001P3 in Appendix B (foul sewer shown in a red colour).

This system services all of O'Connor Park (to the east of the site) which has been built previously.

4.2 Proposed Foul Infrastructure

It is proposed to connect each proposed dwelling into a new 150mm pipe extending from the existing uPVC 150mm Ø foul sewer which is located outside and to the east of the site boundary. 100mm Ø connections will be made at each connection point. The proposed foul sewer is proposed to run through the site (ascending) from east to west, parallel to the proposed 10no. dwellings. See Drawing L099L-001 P3 (attached separately) for foul sewer network layout and Appendix E for Microdrainage Foul sewer network calculations.

5.0 STORM DRAINAGE

5.1 Existing Storm Water Infrastructure

According to the GPR Survey, provided by LCCC (attached within Appendix B), the existing site is serviced by local authority storm sewer which runs along Dale Road (runs into O'Connor Park at the 'T' junction) and is a 225mm uPVC Ø.

The main storm sewer, running parallel to the foul sewer, enters O'Connor Park under the east boundary access road (from Dale Grove) and travels west along the access road to the edge the proposed site. This is shown in drawing L099L-002P3 in Appendix B (foul sewer shown in a cyan colour).

5.2 Proposed Storm Water Infrastructure

It is proposed to connect each new dwelling into new 225/300mm pipes which will connect to the proposed attenuation tank. 100mm Ø connections will be made at each connection point to each dwelling unit. The proposed storm sewer is proposed to run through the site (ascending) from east to west, parallel to the proposed 10no. dwellings to connect to the proposed attenuation tank. The attenuated flow will discharge via a 225mm pipe which will connect into the existing uPVC 225mm Ø storm sewer which is located outside and to the east of

the site boundary. A new storm manhole connection to the existing storm sewer will be required. See Drawing L099L-002 P3 (attached separately) for Surface water network layout and Appendix D for Microdrainage surface water network design.

5.3 Storage Attenuation

It is proposed to attenuate the roof areas of the new dwelling units on the site as well as hardstanding paving around the units. Storm water will be restricted from leaving the site to 2.0 l/s which is the allowable outflow calculated for the site based on the greenfield run off rate calculated for the net site area of 0.267Ha (the total proposed development site area being 0.55Ha) See Appendix F for HR Wallingford IOH124 greenfield runoff calculation. Note that the minimum recommended operational flow for hydrobrakes is 2.0 L/S. It should be noted that while QBar is 0.86 L/S, the minimum practical limit for hydrobrakes is 2.0 L/S and thus this minimum outflow is adopted. This limiting factor requires that a storage tank is provided to retain the storm water volumes expected during an extreme high intensity storm, i.e., a 1 in 100-year event increased in size by 30% for predicted climate change factors plus 10% for urban creep. According to Standard Average Annual Rainfall, SAAR value and the sliding duration rainfall data (See Appendix F for Met Eireann data) the attenuation volume required will be 205m³. See Appendix D for surface water storage attenuation calculations. Attenuation will be achieved by the use of an attenuation structure located under the proposed open landscaped area of the development. The surface water will discharge via a suitable oil separator and flow limited by hydrobrake to 2.0 l/S before discharging by gravity to the existing public storm sewer located to the east of the site.

The proposed location of the attenuation structure, oil interceptor and hydrobrake manhole are illustrated on CSC drawing no. L099L-002 P3 'Surface Water Network and SUDs Layout Plan' attached separately to this report. Details of attenuation tank is shown on CSC drawing L099L-005P2 and oil interceptor and hydrobrake manhole are shown on CSC drawing no. L099L-009 P1 attached separately to this

report. Attached within Appendix G is data information sheet for Hydrobrake/ Flow Control device.

5.4 Surface Water- Proposed Drainage Arrangements

In order to restrict the rate of flow of surface water discharge from the site to pre-development greenfield rates and to ensure improvement in the overall surface water quality before ultimate discharge, the principles of *Sustainable Urban Drainage Systems* (SUDs) are to be implemented. All surface water runoff from the new development will be collected and attenuated within the site confines under the ownership of the applicant and under a wayleave before being discharged to the adjacent public storm sewer. See CSC Drawing L099L-002 P3 Surface Water Network and SUDs Layout Plan', which are attached separately to this report, for the location of the existing public storm sewer into which the proposed network will connect.

The roof and road run-off from the new development is proposed to discharge to a new 225mm storm water network as shown on CSC Drawing L099L-002 P3 'Surface Water Network and SUDs Layout', attached separately to this report. The minimum pipe size in public areas to be 225mm diameter. The proposed stormwater storage attenuation is calculated in accordance with the Institute of Hydrology Report 124 are shown in Appendix D. The Windes Microdrainage Design and Simulation Calculations for the storm drainage network and SUDS systems are shown in Appendix D.

The proposed storm drainage network incorporates an attenuation system to retain storm flows from the development for a 1 in 100-year storm, increased by 30% for predicated climate change factors plus a 10% allowance for urban creep. The storm water run-off from the site will be attenuated prior to outfall to the existing public storm sewer. The attenuation system will accommodate this volume in an open space as indicated on CSC Drawing L099L-002 P1 Surface Water Network and SUDs Layout Plan', attached separately to this report.

The use of SUDs features such as permeable paving/ porous asphalt, bio retention rain gardens will provide infiltration and evaporation as much as physical possible and optimise retention time (See also Section 6.0). Water butts will be provided throughout to optimise water usage. The underground storage system being proposed on the site will provide attenuation for the 1 in 100-year storm including an allowance for 30 % climate change plus a 10% allowance for urban creep.

The proposed surface water network shall discharge via hydrobrake manhole to limit the flow to the equivalent green field rate runoff with any excess flows surcharging back into the attenuation structures. A petrol interceptor will be installed before any outfall location to the open watercourse.

It is proposed to incorporate a Storm Management Plan through the use of SUDs devices and techniques to treat and minimise surface water from the site.

The SUDs devices and techniques are based on the three key design principles – Water Quantity, Water Quality and Water Amenity. The proposed SUDS devices have considered the following;

- Source Control
- Site Control
- Regional control

The above is based on the SUDS Manual.

5.5 Establishment of Soil Type

In order to calculate the allowable discharge rate off the site a number of parameters are required to be established.

- Standard Average Annual Rainfall, *SAAR* (take from Met Eireann data),
- *Sliding duration* rainfall data, (take from Met Eireann data),
- *Soil Type*, (taken from the Flood Studies Report & the HR Wallingford SUDS site).

Soil Type

The Soil type designated for the site, based on the Flood Studies Report & SUDS Website indicate that the site is designated as Soil Type 2. Soil type 2 would generally be loamy gravely soil with moderate infiltration and with a medium discharge rate. The mapping from the Flood Studies Report can be viewed as a high-level interpretation of the soil characteristics as known at the time, but local areas may differ significantly from the map's values.

The Institute of Hydrology Report No. 126 also sets out a mechanism which can be followed when actual site parameters have been established. Four parameters are required:

i) The current sites gradient, (slope), in degrees.

The slope for the site has been determined as **less than 8-degrees**.

ii) Water regime class.

Based on the IH126 & Soil survey Field Handbook (Hodgson 1974), gives three regimes. The subject site is water regime **class 1**.

iii) Permeability Class.

Permeability class has been deemed to be **medium**.

iv) Depth to Impermeable Horizon.

The depth to the impermeable horizon was established to be greater than **40 cm**.

These four parameters allow for the Winter Rainfall Acceptance Potential Classification, graph to be used to determine the soil type. See Figure 3.0 below for the illustrated graph indicating that soil type 2 is applicable for the site and this value was used in generating the Q-bar discharge rate for the scheme. This soil type is in line with the Wallingford map value also Soil type 2.

Water regime class	Depth to impermeable horizon(cm)	Slope Classes								
		<2°			2-8°			>8°		
		Permeability class (above impermeable horizon)								
		Rapid	Medium	Slow	Rapid	Medium	Slow	Rapid	Medium	Slow
1	>80	1			1		2	1	2	3
	80-40	1		2		★	3			4
	<40	-			-			-		
2	>80	2		3				-		
	80-40					4				
	<40	3								
3	>80									
	80-40			5						
	<40									

Figure 3.0 – IH126 Report – WRAP Classification Graph

5.6 Stormwater Drainage Design

In accordance with the requirements of the SUDs Manual, The SUDs principles require a two-fold approach to address storm water management on new developments.

The first aspect is to reduce any post development run-off to pre-development discharge rates. The development is to retain storm water volumes predicted to be experienced during extreme rainfall events. This is defined as the volume of storm water generated during a 1 in 100-year storm event increased by 30% for predicted climate change factors.

To ensure an accurate calculation of the required attenuation for the site Met Eireann was contacted to provide:

a) The SAAR (Standard Annual Average Rainfall) for the area: 1119mm/year.

b) The sliding duration table for the site indicating the 1:100-year rainwater intensities to be used.

c) Soil type value obtained from site investigation, as noted above, has been established as ***Soil Type 2***.

In accordance with the requirements of the Local Authority storm water from a proposed development is to be restricted to 2.0 L/Ha or the greenfield runoff rate, whichever is the greater. The runoff rates have been calculated in accordance with the Institute of Hydrology Report 124. As calculated, the calculated greenfield discharge rate is 3.16 L/S/Ha for all storm water events for positively drain areas. Note the calculations are based on Net drained area of 0.274 Ha and not the gross site area of 0.555 Ha.

The proposed development is to retain storm water volumes predicted to be experienced during extreme rainfall events. This is defined as the volume of storm water generated during a 1 in 100-year storm event increased by 30% for predicted climate change factor plus a 10% allowance for urban creep. The surface water runoff which drains to the large open space requires a total attenuation storage volume of 205m^3.

See Appendix F for the Met Eireann Data and Attenuation Calculation and see Appendix D for storage attenuation calculations and Windes Microdrainage Network/SUDS Design and Simulation Results.

The Microdrainage Model of the Storm / SUDS drainage system has been simulated for the 5,10 and 100 year events for all possible durations including an allowance for 30 % climate change plus 10% for urban creep. The results show surcharging with no flooding. The Model has also been simulated for 50% blockage with results showing only surcharging (See Appendix D).

6.0 SUSTAINABLE URBAN DRAINAGE SYSTEM (SUDS) MEASURES

As mentioned in section 5.4 of the report, a series of SUDs measures have been incorporated. The location, design and type of measures chosen have been derived taking into consideration that the measures used are design to taking in charge standards and the main roads and footpaths along with associated interception storage areas can be taken in charge if so required. We note that the development will not be required to be taking in charge. These are the following;

<u>Permeable Pavement and Porous Asphalt</u>

The proposed permeable pavements will be located in home zone areas, public footpaths and visitor parking bays throughout the development as shown on CSC drawing L099L-002 P1, attached separately to this report. The proposed

permeable paving / porous structures will be filled with suitable granular material with a minimum void porosity of 30% and wrapped in a geotextile filter membrane. The granular material will provide interception within the voids and by raising the invert of the outlet pipe to 100mm above the base. The geotextile filter material can offer secondary treatment of rainfall runoff by preventing ingress of fine material from paved areas through filtration prior to discharge into surface water drainage system. See also attached CSC drawing L099L-012 P1 showing SUDs construction details.

Therefore, rainfall runoff from localised access road will go through a two-stage treatment train including interception and primary treatment in line with SUDS Manual C753 Table 26.7.

Bioretention Systems

The proposed bioretention systems include shallow landscaped rain gardens around the home zone as shown on CSC drawing L099L-002 P3. The proposed bioretention systems will provide interception and treat pollution through the use of engineered soils and vegetation. Runoff collected from adjacent impermeable surfaces will pond temporarily on the surface before filtering through the vegetation and underlying soils. Interception will be provided by installing a weir / outfall pipe at an invert level above the required volume of interception. Part of the runoff volume will be removed through evaporation and plant transpiration. See also attach CSC drawing L099L-012 P2 showing SUDs construction details.

Therefore, rainfall runoff that will discharge into the proposed bioretention system will go through a three-stage treatment train including interception, primary and secondary treatment in line with SuDS Manual C753 Table 26.7.

Water Butts

Water butts are to be installed at the rear of each property and connected to roof down pipes as shown on CSC drawing L099L-002 P3 attached separately. These features will provide rainwater storage and utilised for garden watering purposes. The overflow from each water butt will connect to the surface water drainage network.

The combination of the above noted elements will allow the proposed development to adhere to the principles of sustainable drainage practices while enhancing overall storm water quality.

7.0 POTABLE WATER SUPPLY

According to the GPR Survey, provided by LCCC (attached within Appendix B), the existing section of O'Connor Park is serviced by local authority watermain which runs along the Dale Grove (runs into O'Connor Park at the 'T' junction). The diameter of this pipe is unknown and is not confirmed on the GPR survey.

It is proposed to connect the proposed watermain into the existing 72mm diameter public watermain which is located outside and to the east of the site boundary subject to agreement with Irish Water. The proposed 100mm PE80 SDR Watermain is to run through the site (ascending) from east to west, parallel to the proposed 10no. dwellings. See CSC drawing L099L-001 P3 showing the existing and proposed Watermain layout attached separately to this report.

Hydrants will be located in accordance with Technical Guidance Document B of the Building Regulations and as per the Limerick City & County Council Fire Officer's requirement. There is an existing hydrant located outside the most adjacent existing house.

Rainwater Harvesting will not be provided.

It is also noted that an Irish Water Pre-Connection Enquiry has been submitted and with regards water and wastewater, new connections to the existing networks are deemed feasible subject to provision of fire fighting storage tank as advised by Irish Water. This approval Irish Water approval letter is attached within Appendix C.

8.0 FLOODING

The site is not expected to flood as it is located on an ascending slope. The topographical survey, attached within Appendix A, shows a steady and constant rise from the Dale Road direction to the end of the western site boundary line.

According to floodmaps.ie, there has been no past flooding incidents in this area.

9.0 TRAFFIC MANAGEMENT

Occupants living within the existing O'Connor Park scheme enter the estate via Dale Road. The roadway is a two-way system, which will extend into the new extension of the overall development.

It is proposed that there will be 17no. 'end-to-end' car parking spaces which includes 1no. disabled space along the roadway outside the properties.

Attached separately to this report, please refer to CSC drawings L099L-003 P2 for road layout/ traffic calming details and L099L-011 P2 for Vehicle Tracking layout and Road longitudinal section.

10.0 CONCLUSIONS

10.1 It is proposed to connect each proposed dwelling into a new 150mm pipe extending from the existing uPVC 150mm Ø foul sewer, with 100mm Ø connections will be made at each connection point.

10.2 It is proposed to connect each new dwelling into a new 225mm pipe which extends into the existing uPVC 225mm Ø storm sewer, with 100mm Ø connections will be made at each connection point.

10.3 The Storm network, SUDs and attenuation system has been modelled for the 100 year storm including allowance for 30% climate change and 10% for Urban creep. Results show no flooding with minor surcharging only.

10.4 It is proposed to connect the proposed watermain into the existing public watermain.

10.5 From a review of flood risk mapping, the proposed site is not at risk of flooding.

10.6 It is proposed that there will be 17no. 'end-to-end' car parking spaces which includes 1no. disabled space along the roadway outside the properties.

Appendix A: Topographical Survey & Site Layout

CS CONSULTING
GROUP

LEGEND

KEY:

AV	AIR VALVE
AJ	ARMSTRONG JUNCTION
ESB	ESB MINI PILLAR
EP	ESB POLE
	ELECTRICITY LINE OVER
	TELECOM LINE OVER
FH	FIRE HYDRANT
WM	WATER METER
GAS	GAS VALVE
GATE	GATE
RG	ROAD GULLY
IC	INSPECTION CHAMBER
LP	LAMP POST
MH CL=100.00m	MANHOLE
SP	SIGN POST
SV	SLUICE VALVE
SC	STOPCOCK
NAVI 100.00	SURVEY STATION
KTE	TELECOM CHAMBER
TP	TELECOM POLE
TL	TRAFFIC LIGHT
LB	LIGHT BOLLARD
	TREES
225mmØ Approx.	COMBINED SEWER
225mmØ Approx.	FOUL SEWER
225mmØ Approx.	STORM SEWER

N

NOTE:

01. Levels are in metres to OSGM15 (MALIN DATUM) unless otherwise noted. This datum was established using a Trimble Network Rover GPS system.
02. Co-ordinate system used - ITM95.
03. North refers to Grid North.
04. Only visible services have been surveyed.
05. Sewer TYPE, PIPE DIAMETER & FLOW direction have been estimated unless otherwise noted.
06. Building floor levels have been surveyed remotely and are approximate only, unless otherwise noted.
07. IF ANY DISCREPANCIES ARE FOUND IN THIS SURVEY, THEY SHOULD BE REPORTED TO NCWSURVEYS LTD IMMEDIATELY. FAILURE TO DO SO WILL INVALIDATE ANY SUBSEQUENT ISSUES ARISING FROM USING THIS SURVEY DATA.

REVISIONS

No.	Date	Staff	Description
----	----	----	----
----	----	----	----
----	----	----	----
----	----	----	----

NCW SURVEYS
Wood Road,
Upper Grange,
Newcastlewest,
Co. Limerick.
Tel: +353(0)69-77820
Fax: +353(0)69-77827
Mob: +353(0)87-6752148
Email: Eamon@Ncwsurveys.ie

Client :	Limerick City & County Council
Scale:	A0 @ 1:250
Project :	O' Connor Park Ardagh, Co. Limerick
Site crew :	Mm, Pb — Date : June 2020
Drawn by :	Bm — Date : June 2020
Description :	Site survey
Drawing number :	20-141-001
Rev:	----

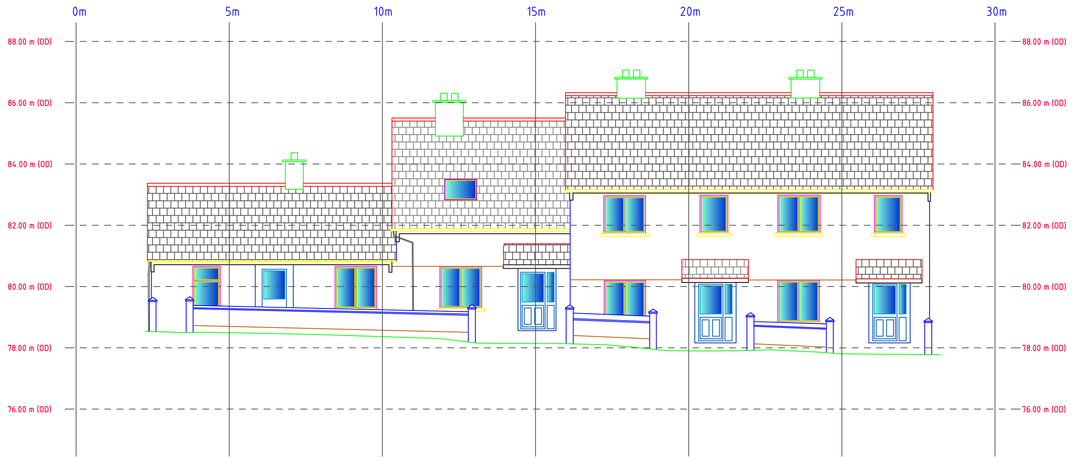

CONTIGUOUS ELEVATION

0 1 2 3 4 6 8 10m
1:100

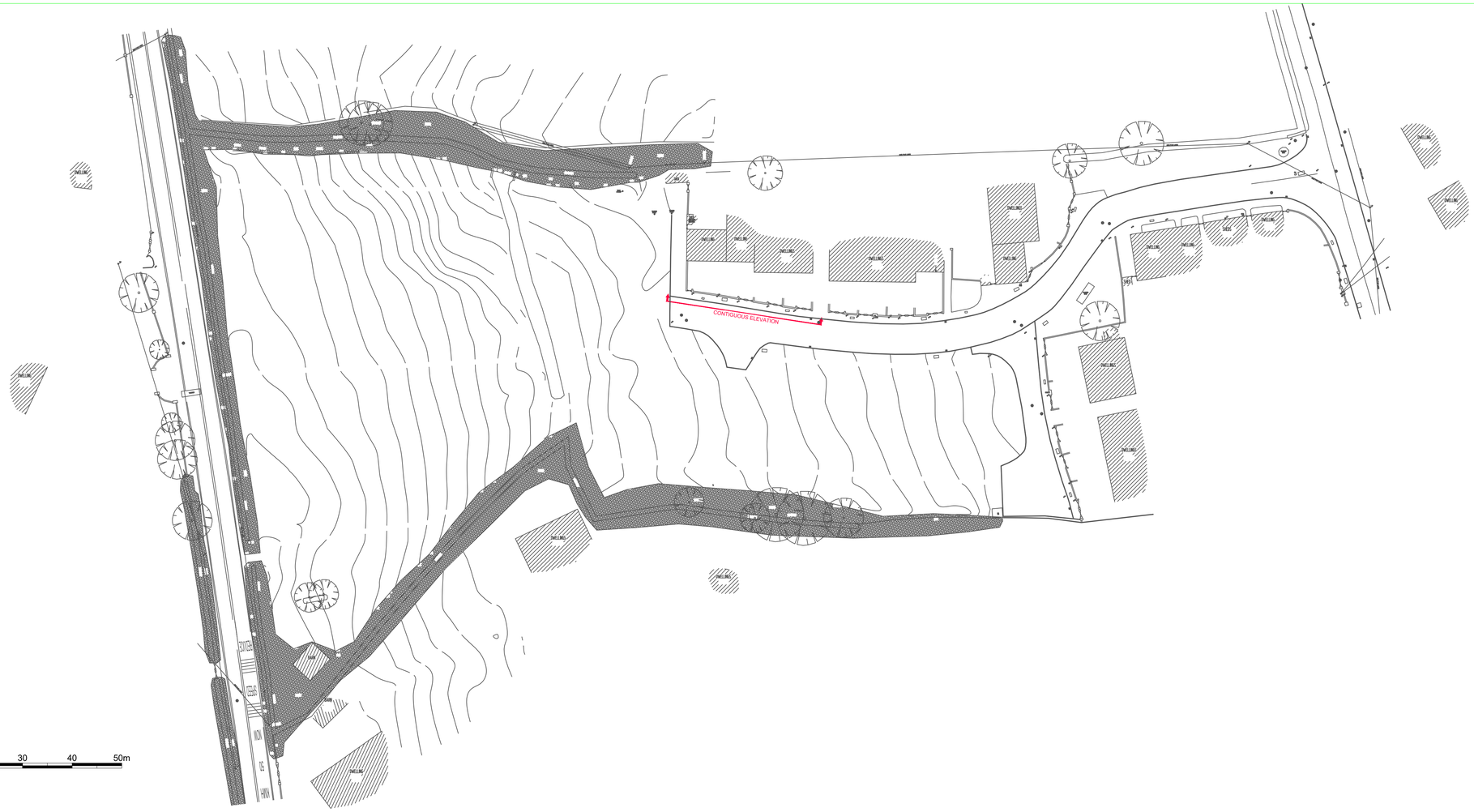

KEYPLAN

0 5 10 15 20 30 40 50m
1:500

LEGEND

KEY:

AV	AIR VALVE
AJ	ARMSTRONG JUNCTION
ESB	ESB MINI PILLAR
EP●	ESB POLE
――――	ELECTRICITY LINE OVER
――――	TELECOM LINE OVER
FH	FIRE HYDRANT
WM	WATER METER
GAS	GAS VALVE
GATE	GATE
RG	ROAD GULLY
IC	INSPECTION CHAMBER
LP●	LAMP POST
MH ● CL=100.00m	MANHOLE
SP●	SIGN POST
SV	SLUICE VALVE
SC	STOPCOCK
Ncw1 100.00	SURVEY STATION
ICTE	TELECOM CHAMBER
TP●	TELECOM POLE
●TL	TRAFFIC LIGHT
●LB	LIGHT BOLLARD
	TREES
225mmϕ Approx.	COMBINED SEWER
225mmϕ Approx.	FOUL SEWER
225mmϕ Approx.	STORM SEWER

NOTE:

01. Levels are in metres to OSGM15 (MALIN DATUM) unless otherwise noted. This datum was established using a Trimble Network Rover GPS system.

REVISIONS

No.	Date	Staff	Description
----	----	----	----
----	----	----	----
----	----	----	----
----	----	----	----

Ncw SURVEYS
Wood Road,
Upper Grange,
Newcastlewest,
Co. Limerick.
Tel: +353(0)69-77820
Fax: +353(0)69-77827
Mob: +353(0)87-8702148
Email: Eamon@Ncwsurveys.ie

Client : Limerick City & County Council

Scale: A1 @ 1:100

Project : Ardagh,
Co. Limerick

Site crew : Mm, Pb — Date : June 2020

Drawn by : Bm — Date : June 2020

Description : Contiguous Elevation & Keyplan

Drawing number : 20-141-002

Rev: ----

PROPOSED TREE LEGEND:

- BETULA PENDULA (SILVER BIRCH)
- BETULA PENDULA CRISPA (WEEPING BIRCH)
- QUERCUS (OAK)
- AESCULUS HIPPOCASTANUM (HORSE CHESTNUT)
- SALIX BABYLONICA (WILLOW)

SITE LAYOUT PLAN

SCALE - 1/250@A1

L:\FN_HousingInfrastructure_01\New Build Local Authority Houses (DD-3.2-PROADV)\i(014) 19000 Projects\NB14_19122 SHIP Ardagh\Project Stages\19122 CAD\2. Issued Drawings (Title Blocks)\Title Blocks\19122-102.dwg

DO NOT SCALE from this drawing. Use figured dimensions. Contractor to check all dimensions on site prior to commencement of works. Any discrepancies are to be referred to the ARCHITECT.

LEGEND:

- BOUNDARY OF PROPOSED LCCC SITE SHOWN IN RED
- BOUNDARY LINE SHOWING EXTENT OF LANDS OWNED BY LIMERICK CITY AND COUNTY COUNCIL
- GRASSED LANDSCAPED AREAS
- CAR PARKING SPACES - PERMEABLE PAVING
- PUBLIC FOOTPATH AREAS - PERMEABLE PAVING
- PUBLIC ROAD AREAS - PERMEABLE PAVING
- PROPOSED NEW HOUSES / UNITS
- PRIVATE REAR GARDEN AREAS - GRASS FINISH
- PRIVATE REAR & SIDE AREAS - PAVED FINISH
- PRIVATE FRONT & SIDE AREAS - PERMEABLE PAVING SETTS / GRAVEL FINISH
- EXISTING HOUSING UNITS
- EXISTING TREES TO BE RETAINED / PROTECTED
- EXISTING HEDGING TO BE RETAINED / PROTECTED
- SITE NOTICE LOCATION

SCHEDULE OF UNITS

UNIT TYPE	NO. BEDROOMS	NO. UNITS
TYPE A1/2	1 BED DUPLEX	2 NO.
TYPE B	3 BED HOUSE	1 NO.
TYPE C	2 BED HOUSE	1 NO.
TYPE D	2 BED HOUSE	3 NO.
TYPE E	3 BED HOUSE	1 NO.
TYPE F1/2	1 BED DUPLEX	2 NO.
TOTAL UNITS		10 NO.

REVISIONS

DATE	REV.	BY.	CHECKED	DESCRIPTION
-	-	-	-	-

Limerick City and County Council
Design & Delivery Services
Merchants Quay
Limerick

PROJECT:
O'CONNOR PARK, ARDAGH,
COUNTY LIMERICK.

STAGE:
2B - PART 8 PLANNING

DRAWING TITLE:
SITE LAYOUT PLAN

DATE:	MAY 2022	DRAWING NO:	
SCALE:	1:250@ A1	102	
DRAWN:	TG		
CHECKED:	DS	SHEET SIZE:	REVISION:
JOB NO:	19122	A1	01
FILE NAME:	-		

Appendix B: GPR Surveys

CS CONSULTING
GROUP

Ncwsurveys Ltd.
Disclaimer

The survey aims to map all existing utilities and sub surface structures and provide information with respect to pipe size, material type and drainage connectivity. However GPR surveying is limited by the following guidelines and it may not be possible to accurately survey, define and locate all services and sub surface structures.

- Locational accuracy is determined by referring to the manufacturers guidelines for the detectors used.
- Existing record information showing underground services is often incomplete and unknown accuracy; therefore it should be regarded only as an indication. In the absence of such information the accuracy of detected services are +- 3% for the RD4000 and +- 10% of depth for the GPR to 2.5m.deep. However, variations within the subsurface may alter this estimated accuracy.
- Although all reasonable steps have been taken to locate all features, there is no guarantee that all will be shown on the drawing as some above ground features may have obstructed the survey.
- GPR surveying operates best within high resistivity material. Clay overburden will reduce the survey depth.
- Due to the attenuation of the radar signal with depth, resolution is restricted, hence making identification of anomalies difficult with increasing depth.
- The depth penetration and quality of the data depends on the ground conditions on the site. Poor data may be a result of areas with high conductivity. Also, high reflective materials close to the surface i.e. rebar may hide deeper anomalies.
- It is not always possible to trace the entire length of each underground service.
- It is always our intention to use the Utility providers' details, if supplied prior to survey commencement as a guide for location purposes. However, should we not be able to locate those guided services we shall not be held responsible for the accuracy, or otherwise, of the location of that service, as issued by the utility provider and therefore shown "Taken from Records" on our drawing. We shall not be liable for any loss that may arise due to the lack of accuracy in the guided information.
- Unless otherwise stated, all services and sub surface structures shown on NCW Surveys Limited plan drawings have been surveyed using approved detectors and the connections between manholes, if not traced, are assumed to run straight.
- Plan accuracies of the order of + or - 150mm may be achieved but this figure may be affected by site conditions. Vertical separation of less than 150mm services run on close proximity, separation may be impossible. Successful tracing of non metallic pipes may be limited.
- Please note that not all buried pipes, cables and ducts can be detected and mapped in consideration of their depth, location, material type, geology and proximity to other utilities. Even an appropriate and professionally executed survey may not be able to achieve a 100% detection rate.
- Utilities which have been unreasonable are shown from Records where possible.
- DP represents distance from the surface level to the top of the service/ radar.

No allowance has been made within our quotation, unless otherwise stated, for the location and mapping of undeclared services. Failure to detect or fully map any declared service will be recorded within the notes accompanying our final survey.

Where technically possible, depth indications will be given. These should be used for guidance only and wherever critical accuracy is required these should be confirmed by the Client by undertaking trial excavations or similar. Bends, lateral service connections, or the close proximity of other services and local magnetic disruption can cause depth indication to be misleading. Certain situations influence the accuracy of the plan and depth indication facility. Depths will not be provided unless we are reasonably confident of their validity.

Where NCW Surveys Limited issues a CAD drawn utility service plan, this should be read in conjunction with all available public utility records etc. As part of our exhaustive Quality Control procedures, NCW Surveys Limited Endeavour to add relevant Public Utility record information onto the final issue drawing. An allowance is made for the width of services, particularly where these are laid in bands, or are of significant size etc. For clarification or appropriate easement bands, we would recommend that direct contact is made with the Asset Owner or Statutory Undertaker.

We exclude the following, except where otherwise specified and possible to do so.

- All private service connections, (including water or gas fittings where no through flow of applied signal is possible.
- Abandoned or decommissioned cables or terminated short lengths of pipe.
- Internal building services.
- Fibre optic cables (except where laid with a standard communications cable or built in tracer wire or similar conductor system) or can be clearly located using ground penetrating radar.
- Small diameter cables less than 17mm diameter, or pipes less than 38mm diameter.
- Deep ground services unless specifically requested.
- Lifting manhole covers which require longer than 10 minute effort using standard heavy duty lifting apparatus.
- Services positioned directly below other pipes or cables etc (i.e. masking signal) - intrusive verification options available on request.
- Deep non metallic pipes, ducts or culverts (unless probing or Pipe Track 3d is specified as part of the fully invasive survey option).
- Non-linear/tortuous pipework (displaced joints etc) or acute bends between access points.

Please note that our Quotation does not allow for location of individual service feeds to properties unless reasonable to do so, as access would be required into each property to apply direct connections to inlet points and this would significantly increase the scope of work, survey cost and also cause possible disruption to occupants.

Electro-detection techniques have been used in the location of underground services. The results are not infallible and trial excavations must be carried out to confirm service identification, positions and particularly depths. Although all reasonable effort has been made in searching available record drawings, the completeness of the underground service information cannot be guaranteed.

Any excavations undertaken on site are to be in accordance with HSG (47) Avoiding Danger From Underground Services.

All work carried out by Ncwsurveys Ltd (And/or approved Sub-contractors) conforms to the guidelines set out by The Survey Association (TSA).

LEGEND
Underground Utilities

- EIRCOM
- CABLE TELEVISION
- CLOSE CIRCUIT TELEVISION
- COMMUNICATION
- COMBINED SEWER
- COMPRESSED AIR
- FIBRE OPTICS
- FOUL WATER
- GAS
- HV ELECTRICITY CABLE
- LV ELECTRICITY CABLE
- OIL PIPELINE
- STREET LIGHTING
- SURFACE WATER
- TRAFFIC SIGNAL CONTROLS
- UNKNOWN
- WATER MAIN
- 275kV
- 132kV
- 110kV
- 66kV
- 38kV
- 11kV

LEGEND

KEY:

- AV — AIR VALVE
- AJ — ARMSTRONG JUNCTION
- ESB — ESB MINI PILLAR
- EP — ESB POLE
- ELECTRICITY LINE OVER
- TELECOM LINE OVER
- FH — FIRE HYDRANT
- WM — WATER METER
- GAS — GAS VALVE
- GATE — GATE
- RG — ROAD GULLY
- IC — INSPECTION CHAMBER
- LP — LAMP POST
- MH CL=100.00m — MANHOLE
- SP — SIGN POST
- SV — SLUICE VALVE
- SC — STOPCOCK
- SS — SURVEY STATION
- KTE — TELECOM CHAMBER
- TP — TELECOM POLE
- TL — TRAFFIC LIGHT
- B — LIGHT BOLLARD
- TREES
- 225mmØ Approx. — COMBINED SEWER
- 225mmØ Approx. — FOUL SEWER
- 225mmØ Approx. — STORM SEWER

NOTE:

01. Levels are in metres to OSGM15 (MALIN DATUM) unless otherwise noted. This datum was established using a Trimble Network Rover GPS system.
02. Co-ordinate system used - ITM95.
03. North refers to Grid North.
04. Only visible services have been surveyed.
05. Sewer TYPE, PIPE DIAMETER & FLOW direction have been estimated unless otherwise noted.
06. Building floor levels have been surveyed remotely and are approximate only, unless otherwise noted.
07. IF ANY DISCREPANCIES ARE FOUND IN THIS SURVEY, THEY SHOULD BE REPORTED TO NCWSURVEYS LTD IMMEDIATELY. FAILURE TO DO SO WILL INVALIDATE ANY SUBSEQUENT ISSUES ARISING FROM USING THIS SURVEY DATA.

REVISIONS

No.	Date	Staff	Description
----	----	----	----
----	----	----	----
----	----	----	----
----	----	----	----

NCW SURVEYS

Wood Road,
Upper Grange,
Newcastlewest,
Co. Limerick.
Tel: +353(0)69-77820
Fax: +353(0)69-77827
Mob: +353(0)87-6702146
Email: Eamon@Ncwsurveys.ie

Client :	Limerick City & County Council
Scale:	A0 @ 1:250
Project :	Ardagh, Co. Limerick
Site crew :	Mm, Pb — Date : June 2020
Drawn by :	Bm — Date : June 2020
Description :	Utility survey
Drawing number :	20-141-003 — Rev: ----

Appendix C: Irish Water Pre-Connection Feasibility

CS CONSULTING
GROUP

Uisce Éireann
Bosca OP 448
Oifig Sheachadta na
Cathrach Theas
Cathair Chorcaí

Irish Water
PO Box 448,
South City
Delivery Office,
Cork City.

www.water.ie

Billy Lynch
Merchants Quay
Limerick

6 March 2020

Dear Billy Lynch,

Re: Connection Reference No CDS20000903 pre-connection enquiry -
Subject to contract | Contract denied

Connection for Housing Development of 11 unit(s) at O Connor Park, Ardagh, Co. Limerick.

Irish Water has reviewed your pre-connection enquiry in relation to a water & wastewater connection at O Connor Park, Ardagh, Co. Limerick.

Based upon the details that you have provided with your pre-connection enquiry and on the capacity currently available in the network(s), as assessed by Irish Water, we wish to advise you that, subject to a valid connection agreement being put in place, your proposed connection to the Irish Water network(s) can be facilitated.

Water

New connection to the existing network is feasible without upgrade.

This Confirmation of Feasibility to connect to the Irish Water infrastructure does not extend to your fire flow requirements. Please note that Irish Water can not guarantee a flow rate to meet fire flow requirements and in order to guarantee a flow to meet the Fire Authority requirements, you should provide adequate fire storage capacity within your development. In order to determine the potential flow that could be delivered during normal operational conditions, an on site assessment of the existing network is required.

Wastewater

New connection to the existing network is feasible without upgrade.

All infrastructure should be designed and installed in accordance with the Irish Water Codes of Practice and Standard Details. A design proposal for the water and/or wastewater infrastructure should be submitted to Irish Water for assessment. Prior to submitting your planning application, you are required to submit these detailed design proposals to Irish Water for review.

You are advised that this correspondence does not constitute an offer in whole or in part to provide a connection to any Irish Water infrastructure and is provided subject to a connection agreement being signed at a later date.

A connection agreement can be applied for by completing the connection application form available at **www.water.ie/connections**. Irish Water's current charges for water and wastewater connections are set out in the Water Charges Plan as approved by the Commission for Regulation of Utilities.

If you have any further questions, please contact Marko Komso from the design team on 022 54611 or email mkomso@water.ie. For further information, visit **www.water.ie/connections.**

Yours sincerely,

Maria O'Dwyer

Connections and Developer Services

Appendix D: Storm Water SUDs Model Drainage Design & Attenuation Calculations

CS CONSULTING
GROUP

STORM SEWER DESIGN by the Modified Rational Method

Design Criteria for Storm

Pipe Sizes STANDARD Manhole Sizes STANDARD

FSR Rainfall Model - Scotland and Ireland

Return Period (years)	1	PIMP (%)	100
M5-60 (mm)	18.400	Add Flow / Climate Change (%)	10
Ratio R	0.251	Minimum Backdrop Height (m)	0.200
Maximum Rainfall (mm/hr)	50	Maximum Backdrop Height (m)	1.500
Maximum Time of Concentration (mins)	30	Min Design Depth for Optimisation (m)	1.200
Foul Sewage (l/s/ha)	0.000	Min Vel for Auto Design only (m/s)	1.00
Volumetric Runoff Coeff.	0.750	Min Slope for Optimisation (1:X)	500

Designed with Level Inverts

Time Area Diagram for Storm

Time (mins)	Area (ha)	Time (mins)	Area (ha)
0-4	0.198	4-8	0.069

Total Area Contributing (ha) = 0.267

Total Pipe Volume (m³) = 7.554

Network Design Table for Storm

« - Indicates pipe capacity < flow

PN	Length (m)	Fall (m)	Slope (1:X)	I.Area (ha)	T.E. (mins)	Base Flow (l/s)	k (mm)	HYD SECT	DIA (mm)	Section Type	Auto Design
S1.000	7.392	0.148	49.9	0.005	4.00	0.0	0.600	o	150	Pipe/Conduit	
S1.001	46.684	2.030	23.0	0.099	0.00	0.0	0.600	o	225	Pipe/Conduit	
S2.000	8.085	0.162	49.9	0.005	4.00	0.0	0.600	o	150	Pipe/Conduit	
S3.000	6.699	0.134	50.0	0.005	4.00	0.0	0.600	o	150	Pipe/Conduit	
S1.002	21.725	1.030	21.1	0.027	0.00	0.0	0.600	o	225	Pipe/Conduit	
S4.000	4.383	0.077	56.9	0.003	4.00	0.0	0.600	o	150	Pipe/Conduit	

Network Results Table

PN	Rain (mm/hr)	T.C. (mins)	US/IL (m)	Σ I.Area (ha)	Σ Base Flow (l/s)	Foul (l/s)	Add Flow (l/s)	Vel (m/s)	Cap (l/s)	Flow (l/s)
S1.000	46.17	4.09	82.210	0.005	0.0	0.0	0.1	1.43	25.2	0.7
S1.001	45.16	4.37	82.062	0.104	0.0	0.0	1.3	2.74	109.0	14.0
S2.000	46.14	4.09	80.300	0.005	0.0	0.0	0.1	1.43	25.2	0.7
S3.000	46.20	4.08	80.300	0.005	0.0	0.0	0.1	1.43	25.2	0.7
S1.002	44.73	4.50	80.032	0.141	0.0	0.0	1.7	2.86	113.8	18.8
S4.000	46.28	4.05	79.300	0.003	0.0	0.0	0.0	1.34	23.6	0.4

Network Design Table for Storm

PN	Length (m)	Fall (m)	Slope (1:X)	I.Area (ha)	T.E. (mins)	Base Flow (l/s)	k (mm)	HYD SECT	DIA (mm)	Section Type	Auto Design
S5.000	3.920	0.065	60.3	0.004	4.00	0.0	0.600	o	150	Pipe/Conduit	
S6.000	9.550	0.191	50.0	0.007	4.00	0.0	0.600	o	150	Pipe/Conduit	
S1.003	6.167	0.385	16.0	0.000	0.00	0.0	0.600	o	225	Pipe/Conduit	
S7.000	7.654	0.383	20.0	0.053	4.00	0.0	0.600	o	150	Pipe/Conduit	
S8.000	5.270	0.090	58.6	0.004	4.00	0.0	0.600	o	150	Pipe/Conduit	
S1.004	19.110	1.194	16.0	0.028	0.00	0.0	0.600	o	225	Pipe/Conduit	
S9.000	5.837	0.035	166.8	0.005	4.00	0.0	0.600	o	150	Pipe/Conduit	
S10.000	2.393	0.048	49.9	0.008	4.00	0.0	0.600	o	150	Pipe/Conduit	
S1.005	14.157	0.202	70.1	0.014	0.00	0.0	0.600	o	225	Pipe/Conduit	
S1.006	20.157	0.258	78.1	0.000	0.00	0.0	0.600	o	300	Pipe/Conduit	
S1.007	13.394	0.089	150.5	0.000	0.00	0.0	0.600	o	150	Pipe/Conduit	
S1.008	13.175	0.306	43.1	0.000	0.00	0.0	0.600	o	225	Pipe/Conduit	

Network Results Table

PN	Rain (mm/hr)	T.C. (mins)	US/IL (m)	Σ I.Area (ha)	Σ Base Flow (l/s)	Foul (l/s)	Add Flow (l/s)	Vel (m/s)	Cap (l/s)	Flow (l/s)
S5.000	46.30	4.05	79.300	0.004	0.0	0.0	0.1	1.30	22.9	0.6
S6.000	46.08	4.11	79.500	0.007	0.0	0.0	0.1	1.43	25.2	1.0
S1.003	44.63	4.53	79.002	0.155	0.0	0.0	1.9	3.29	130.7	20.6
S7.000	46.28	4.06	79.200	0.053	0.0	0.0	0.7	2.26	40.0	7.3
S8.000	46.24	4.07	79.000	0.004	0.0	0.0	0.1	1.32	23.3	0.6
S1.004	44.32	4.62	78.617	0.240	0.0	0.0	2.9	3.29	130.7	31.7
S9.000	46.03	4.13	78.000	0.005	0.0	0.0	0.1	0.78	13.7	0.7
S10.000	46.38	4.03	77.480	0.008	0.0	0.0	0.1	1.43	25.2	1.1
S1.005	43.85	4.78	77.423	0.267	0.0	0.0	3.2	1.56	62.2	34.9
S1.006	43.27	4.96	77.200	0.267	0.0	0.0	3.2	1.78	125.9	34.9
S1.007	42.47	5.24	76.940	0.267	0.0	0.0	3.2	0.82	14.4«	34.9
S1.008	42.16	5.35	76.851	0.267	0.0	0.0	3.2	2.00	79.5	34.9

Manhole Schedules for Storm

MH Name	MH CL (m)	MH Depth (m)	MH Connection	MH Diam.,L*W (mm)	Pipe Out PN	Pipe Out Invert Level (m)	Pipe Out Diameter (mm)	Pipes In PN	Pipes In Invert Level (m)	Pipes In Diameter (mm)	Backdrop (mm)
S1	83.700	1.490	Open Manhole	1200	S1.000	82.210	150				
S2	83.500	1.438	Open Manhole	1200	S1.001	82.062	225	S1.000	82.062	150	
S3	81.600	1.300	Open Manhole	1200	S2.000	80.300	150				
S4	81.800	1.500	Open Manhole	1200	S3.000	80.300	150				
S5	81.500	1.468	Open Manhole	1200	S1.002	80.032	225	S1.001	80.032	225	
								S2.000	80.138	150	31
								S3.000	80.166	150	59
S6	80.600	1.300	Open Manhole	1200	S4.000	79.300	150				
S7	80.500	1.200	Open Manhole	1200	S5.000	79.300	150				
S8	80.900	1.400	Open Manhole	1200	S6.000	79.500	150				
S9	80.400	1.398	Open Manhole	1200	S1.003	79.002	225	S1.002	79.002	225	
								S4.000	79.223	150	146
								S5.000	79.235	150	158
								S6.000	79.309	150	232
S10	80.300	1.100	Open Manhole	1200	S7.000	79.200	150				
S11	80.100	1.100	Open Manhole	1200	S8.000	79.000	150				
S12	80.050	1.433	Open Manhole	1200	S1.004	78.617	225	S1.003	78.617	225	
								S7.000	78.817	150	125
								S8.000	78.910	150	218
S13	79.100	1.100	Open Manhole	1200	S9.000	78.000	150				
S14	79.050	1.570	Open Manhole	1200	S10.000	77.480	150				
S15	79.000	1.577	Open Manhole	1200	S1.005	77.423	225	S1.004	77.423	225	
								S9.000	77.965	150	467
								S10.000	77.432	150	
S16	79.200	2.000	Open Manhole	1200	S1.006	77.200	300	S1.005	77.221	225	
S17	78.800	1.860	Open Manhole	3000 x 3000	S1.007	76.940	150	S1.006	76.942	300	152
S18	78.420	1.569	Open Manhole	1200	S1.008	76.851	225	S1.007	76.851	150	
SDS Pipe	77.600	1.055	Open Manhole	1200		OUTFALL		S1.008	76.545	225	

MH Name	Manhole Easting (m)	Manhole Northing (m)	Intersection Easting (m)	Intersection Northing (m)	Manhole Access	Layout (North)
S1	527800783.924	638805692.906	527800783.924	638805692.906	Required	
S2	527800790.740	638805690.047	527800790.740	638805690.047	Required	
S3	527800828.778	638805699.329	527800828.778	638805699.329	Required	
S4	527800832.257	638805692.999	527800832.257	638805692.999	Required	
S5	527800836.747	638805697.969	527800836.747	638805697.969	Required	

Manhole Schedules for Storm

MH Name	Manhole Easting (m)	Manhole Northing (m)	Intersection Easting (m)	Intersection Northing (m)	Manhole Access	Layout (North)
S6	527800834.229	638805717.604	527800834.229	638805717.604	Required	
S7	527800841.840	638805718.462	527800841.840	638805718.462	Required	
S8	527800830.172	638805714.334	527800830.172	638805714.334	Required	
S9	527800838.105	638805719.651	527800838.105	638805719.651	Required	
S10	527800834.910	638805727.437	527800834.910	638805727.437	Required	
S11	527800836.698	638805724.203	527800836.698	638805724.203	Required	
S12	527800841.962	638805724.463	527800841.962	638805724.463	Required	
S13	527800861.624	638805727.804	527800861.624	638805727.804	Required	
S14	527800862.054	638805719.906	527800862.054	638805719.906	Required	
S15	527800860.914	638805722.010	527800860.914	638805722.010	Required	
S16	527800859.377	638805707.937	527800859.377	638805707.937	Required	
S17	527800879.222	638805711.468	527800879.222	638805711.468	Required	
S18	527800889.642	638805719.884	527800889.642	638805719.884	Required	
SDS Pipe	527800902.574	638805717.366			No Entry	

PIPELINE SCHEDULES for Storm

Upstream Manhole

PN	Hyd Sect	Diam (mm)	MH Name	C.Level (m)	I.Level (m)	D.Depth (m)	MH Connection	MH DIAM., L*W (mm)
S1.000	o	150	S1	83.700	82.210	1.340	Open Manhole	1200
S1.001	o	225	S2	83.500	82.062	1.213	Open Manhole	1200
S2.000	o	150	S3	81.600	80.300	1.150	Open Manhole	1200
S3.000	o	150	S4	81.800	80.300	1.350	Open Manhole	1200
S1.002	o	225	S5	81.500	80.032	1.243	Open Manhole	1200
S4.000	o	150	S6	80.600	79.300	1.150	Open Manhole	1200
S5.000	o	150	S7	80.500	79.300	1.050	Open Manhole	1200
S6.000	o	150	S8	80.900	79.500	1.250	Open Manhole	1200
S1.003	o	225	S9	80.400	79.002	1.173	Open Manhole	1200
S7.000	o	150	S10	80.300	79.200	0.950	Open Manhole	1200
S8.000	o	150	S11	80.100	79.000	0.950	Open Manhole	1200
S1.004	o	225	S12	80.050	78.617	1.208	Open Manhole	1200
S9.000	o	150	S13	79.100	78.000	0.950	Open Manhole	1200
S10.000	o	150	S14	79.050	77.480	1.420	Open Manhole	1200

Downstream Manhole

PN	Length (m)	Slope (1:X)	MH Name	C.Level (m)	I.Level (m)	D.Depth (m)	MH Connection	MH DIAM., L*W (mm)
S1.000	7.392	49.9	S2	83.500	82.062	1.288	Open Manhole	1200
S1.001	46.684	23.0	S5	81.500	80.032	1.243	Open Manhole	1200
S2.000	8.085	49.9	S5	81.500	80.138	1.212	Open Manhole	1200
S3.000	6.699	50.0	S5	81.500	80.166	1.184	Open Manhole	1200
S1.002	21.725	21.1	S9	80.400	79.002	1.173	Open Manhole	1200
S4.000	4.383	56.9	S9	80.400	79.223	1.027	Open Manhole	1200
S5.000	3.920	60.3	S9	80.400	79.235	1.015	Open Manhole	1200
S6.000	9.550	50.0	S9	80.400	79.309	0.941	Open Manhole	1200
S1.003	6.167	16.0	S12	80.050	78.617	1.208	Open Manhole	1200
S7.000	7.654	20.0	S12	80.050	78.817	1.083	Open Manhole	1200
S8.000	5.270	58.6	S12	80.050	78.910	0.990	Open Manhole	1200
S1.004	19.110	16.0	S15	79.000	77.423	1.352	Open Manhole	1200
S9.000	5.837	166.8	S15	79.000	77.965	0.885	Open Manhole	1200
S10.000	2.393	49.9	S15	79.000	77.432	1.418	Open Manhole	1200

PIPELINE SCHEDULES for Storm

Upstream Manhole

PN	Hyd Sect	Diam (mm)	MH Name	C.Level (m)	I.Level (m)	D.Depth (m)	MH Connection	MH DIAM., L*W (mm)
S1.005	o	225	S15	79.000	77.423	1.352	Open Manhole	1200
S1.006	o	300	S16	79.200	77.200	1.700	Open Manhole	1200
S1.007	o	150	S17	78.800	76.940	1.710	Open Manhole	3000 x 3000
S1.008	o	225	S18	78.420	76.851	1.344	Open Manhole	1200

Downstream Manhole

PN	Length (m)	Slope (1:X)	MH Name	C.Level (m)	I.Level (m)	D.Depth (m)	MH Connection	MH DIAM., L*W (mm)
S1.005	14.157	70.1	S16	79.200	77.221	1.754	Open Manhole	1200
S1.006	20.157	78.1	S17	78.800	76.942	1.558	Open Manhole	3000 x 3000
S1.007	13.394	150.5	S18	78.420	76.851	1.419	Open Manhole	1200
S1.008	13.175	43.1	SDS Pipe	77.600	76.545	0.830	Open Manhole	1200

Area Summary for Storm

Pipe Number	PIMP Type	PIMP Name	PIMP (%)	Gross Area (ha)	Imp. Area (ha)	Pipe Total (ha)
1.000	-	-	100	0.005	0.005	0.005
1.001	-	-	100	0.099	0.099	0.099
2.000	-	-	100	0.005	0.005	0.005
3.000	-	-	100	0.005	0.005	0.005
1.002	-	-	100	0.027	0.027	0.027
4.000	-	-	100	0.003	0.003	0.003
5.000	-	-	100	0.004	0.004	0.004
6.000	-	-	100	0.007	0.007	0.007
1.003	-	-	100	0.000	0.000	0.000
7.000	-	-	100	0.053	0.053	0.053
8.000	-	-	100	0.004	0.004	0.004
1.004	-	-	100	0.028	0.028	0.028
9.000	-	-	100	0.005	0.005	0.005
10.000	-	-	100	0.008	0.008	0.008
1.005	-	-	100	0.014	0.014	0.014
1.006	-	-	100	0.000	0.000	0.000
1.007	-	-	100	0.000	0.000	0.000
1.008	-	-	100	0.000	0.000	0.000
				Total	Total	Total
				0.267	0.267	0.267

Free Flowing Outfall Details for Storm

Outfall Pipe Number	Outfall Name	C. Level (m)	I. Level (m)	Min I. Level (m)	D,L (mm)	W (mm)
S1.008	SDS Pipe	77.600	76.545	76.535	1200	0

Simulation Criteria for Storm

Volumetric Runoff Coeff	0.750	Additional Flow - % of Total Flow	0.000
Areal Reduction Factor	1.000	MADD Factor * 10m³/ha Storage	2.000
Hot Start (mins)	0	Inlet Coeffiecient	0.800
Hot Start Level (mm)	0	Flow per Person per Day (l/per/day)	0.000
Manhole Headloss Coeff (Global)	0.500	Run Time (mins)	60
Foul Sewage per hectare (l/s)	0.000	Output Interval (mins)	1

Number of Input Hydrographs	0	Number of Offline Controls	0	Number of Time/Area Diagrams	0
Number of Online Controls	1	Number of Storage Structures	11	Number of Real Time Controls	0

Synthetic Rainfall Details

Rainfall Model	FSR	Profile Type	Summer
Return Period (years)	1	Cv (Summer)	0.750
Region	Scotland and Ireland	Cv (Winter)	0.840
M5-60 (mm)	18.400	Storm Duration (mins)	30
Ratio R	0.251		

Online Controls for Storm

Hydro-Brake® Optimum Manhole: S17, DS/PN: S1.007, Volume (m³): 18.0

Unit Reference	MD-SHE-0067-2000-1000-2000
Design Head (m)	1.000
Design Flow (l/s)	2.0
Flush-Flo™	Calculated
Objective	Minimise upstream storage
Application	Surface
Sump Available	Yes
Diameter (mm)	67
Invert Level (m)	76.940
Minimum Outlet Pipe Diameter (mm)	100
Suggested Manhole Diameter (mm)	1200

Control Points	Head (m)	Flow (l/s)	Control Points	Head (m)	Flow (l/s)
Design Point (Calculated)	1.000	2.0	Kick-Flo®	0.599	1.6
Flush-Flo™	0.296	1.9	Mean Flow over Head Range	-	1.7

The hydrological calculations have been based on the Head/Discharge relationship for the Hydro-Brake® Optimum as specified. Should another type of control device other than a Hydro-Brake Optimum® be utilised then these storage routing calculations will be invalidated

Depth (m)	Flow (l/s)	Depth (m)	Flow (l/s)	Depth (m)	Flow (l/s)	Depth (m)	Flow (l/s)	Depth (m)	Flow (l/s)
0.100	1.6	0.800	1.8	2.000	2.7	4.000	3.8	7.000	4.9
0.200	1.9	1.000	2.0	2.200	2.9	4.500	4.0	7.500	5.1
0.300	1.9	1.200	2.2	2.400	3.0	5.000	4.2	8.000	5.2
0.400	1.9	1.400	2.3	2.600	3.1	5.500	4.4	8.500	5.4
0.500	1.8	1.600	2.5	3.000	3.3	6.000	4.6	9.000	5.5
0.600	1.6	1.800	2.6	3.500	3.5	6.500	4.7	9.500	5.7

Storage Structures for Storm

Porous Car Park Manhole: S2, DS/PN: S1.001

Infiltration Coefficient Base (m/hr)	0.00000	Width (m)	5.0
Membrane Percolation (mm/hr)	1000	Length (m)	36.2
Max Percolation (l/s)	50.3	Slope (1:X)	50.0
Safety Factor	2.0	Depression Storage (mm)	5
Porosity	0.30	Evaporation (mm/day)	3
Invert Level (m)	82.062	Membrane Depth (mm)	0

Porous Car Park Manhole: S3, DS/PN: S2.000

Infiltration Coefficient Base (m/hr)	0.00000	Width (m)	2.5
Membrane Percolation (mm/hr)	1000	Length (m)	20.0
Max Percolation (l/s)	13.9	Slope (1:X)	0.0
Safety Factor	2.0	Depression Storage (mm)	5
Porosity	0.30	Evaporation (mm/day)	3
Invert Level (m)	80.300	Membrane Depth (mm)	0

Porous Car Park Manhole: S4, DS/PN: S3.000

Infiltration Coefficient Base (m/hr)	0.00000	Width (m)	4.0
Membrane Percolation (mm/hr)	1000	Length (m)	20.0
Max Percolation (l/s)	22.2	Slope (1:X)	2.5
Safety Factor	2.0	Depression Storage (mm)	5
Porosity	0.30	Evaporation (mm/day)	3
Invert Level (m)	80.300	Membrane Depth (mm)	0

Porous Car Park Manhole: S5, DS/PN: S1.002

Infiltration Coefficient Base (m/hr)	0.00000	Width (m)	5.0
Membrane Percolation (mm/hr)	1000	Length (m)	20.8
Max Percolation (l/s)	28.9	Slope (1:X)	50.0
Safety Factor	2.0	Depression Storage (mm)	5
Porosity	0.30	Evaporation (mm/day)	3
Invert Level (m)	80.032	Membrane Depth (mm)	0

Porous Car Park Manhole: S6, DS/PN: S4.000

Infiltration Coefficient Base (m/hr)	0.00000	Width (m)	2.5
Membrane Percolation (mm/hr)	1000	Length (m)	14.0
Max Percolation (l/s)	9.7	Slope (1:X)	20.0
Safety Factor	2.0	Depression Storage (mm)	5
Porosity	0.30	Evaporation (mm/day)	3
Invert Level (m)	79.300	Membrane Depth (mm)	0

Porous Car Park Manhole: S7, DS/PN: S5.000

Infiltration Coefficient Base (m/hr)	0.00000	Width (m)	3.7
Membrane Percolation (mm/hr)	1000	Length (m)	10.5
Max Percolation (l/s)	10.8	Slope (1:X)	21.0
Safety Factor	2.0	Depression Storage (mm)	5
Porosity	0.30	Evaporation (mm/day)	3
Invert Level (m)	79.300	Membrane Depth (mm)	0

Bio-Retention Area Manhole: S8, DS/PN: S6.000

Invert Level (m)	79.500	Infiltration Coefficient Base (m/hr)	0.00000
Porosity	1.00	Infiltration Coefficient Side (m/hr)	0.00000

Bio-Retention Area Manhole: S8, DS/PN: S6.000

Safety Factor 2.0

Depth (m)	Area (m²)	Perimeter (m)	Depth (m)	Area (m²)	Perimeter (m)
0.000	26.4	33.000	1.000	26.4	33.000

Bio-Retention Area Manhole: S10, DS/PN: S7.000

Invert Level (m)	79.200	Infiltration Coefficient Side (m/hr)	0.00000
Porosity	1.00	Safety Factor	2.0
Infiltration Coefficient Base (m/hr)	0.00000		

Depth (m)	Area (m²)	Perimeter (m)	Depth (m)	Area (m²)	Perimeter (m)
0.000	100.0	39.000	1.000	100.0	39.000

Porous Car Park Manhole: S13, DS/PN: S9.000

Infiltration Coefficient Base (m/hr)	0.00000	Width (m)	2.5
Membrane Percolation (mm/hr)	1000	Length (m)	20.0
Max Percolation (l/s)	13.9	Slope (1:X)	21.0
Safety Factor	2.0	Depression Storage (mm)	5
Porosity	0.30	Evaporation (mm/day)	3
Invert Level (m)	78.300	Membrane Depth (mm)	0

Porous Car Park Manhole: S14, DS/PN: S10.000

Infiltration Coefficient Base (m/hr)	0.00000	Width (m)	2.5
Membrane Percolation (mm/hr)	1000	Length (m)	32.0
Max Percolation (l/s)	22.2	Slope (1:X)	20.0
Safety Factor	2.0	Depression Storage (mm)	5
Porosity	0.30	Evaporation (mm/day)	3
Invert Level (m)	77.480	Membrane Depth (mm)	0

Cellular Storage Manhole: S16, DS/PN: S1.006

Invert Level (m)	77.000	Safety Factor	2.0
Infiltration Coefficient Base (m/hr)	0.00000	Porosity	0.95
Infiltration Coefficient Side (m/hr)	0.00000		

Depth (m)	Area (m²)	Inf. Area (m²)	Depth (m)	Area (m²)	Inf. Area (m²)
0.000	155.0	0.0	1.440	155.0	0.0

Summary of Critical Results by Maximum Level (Rank 1) for Storm

Simulation Criteria

Areal Reduction Factor 1.000 Additional Flow - % of Total Flow 0.000
Hot Start (mins) 0 MADD Factor * 10m³/ha Storage 2.000
Hot Start Level (mm) 0 Inlet Coeffiecient 0.800
Manhole Headloss Coeff (Global) 0.500 Flow per Person per Day (l/per/day) 0.000
Foul Sewage per hectare (l/s) 0.000

Number of Input Hydrographs 0 Number of Offline Controls 0 Number of Time/Area Diagrams 0
Number of Online Controls 1 Number of Storage Structures 11 Number of Real Time Controls 0

Synthetic Rainfall Details

Rainfall Model FSR M5-60 (mm) 18.400 Cv (Summer) 0.750
Region Scotland and Ireland Ratio R 0.251 Cv (Winter) 0.840

Margin for Flood Risk Warning (mm) 20.0 DVD Status OFF
Analysis Timestep Fine Inertia Status OFF
DTS Status ON

Profile(s) Summer and Winter
Duration(s) (mins) 15, 30, 60, 120, 180, 240, 360, 480, 600, 720, 960, 1440, 2160, 2880, 4320, 5760, 7200, 8640, 10080
Return Period(s) (years) 1, 30, 100
Climate Change (%) 30, 30, 30

PN	US/MH Name	Storm	Return Period	Climate Change	First (X) Surcharge	First (Y) Flood	First (Z) Overflow	Overflow Act.	Water Level (m)	Surcharged Depth (m)	Flooded Volume (m³)
S1.000	S1	15 Winter	100	+30%					82.243	-0.117	0.000
S1.001	S2	15 Winter	100	+30%					82.173	-0.114	0.000
S2.000	S3	30 Summer	100	+30%					80.327	-0.123	0.000
S3.000	S4	15 Summer	100	+30%					80.335	-0.115	0.000
S1.002	S5	15 Winter	100	+30%					80.165	-0.092	0.000
S4.000	S6	15 Summer	100	+30%					79.330	-0.120	0.000
S5.000	S7	15 Summer	100	+30%					79.335	-0.115	0.000
S6.000	S8	30 Winter	100	+30%					79.531	-0.119	0.000
S1.003	S9	15 Winter	100	+30%					79.159	-0.068	0.000
S7.000	S10	30 Winter	100	+30%					79.268	-0.082	0.000
S8.000	S11	15 Summer	100	+30%					79.032	-0.118	0.000
S1.004	S12	15 Winter	100	+30%					78.824	-0.018	0.000
S9.000	S13	960 Winter	100	+30%					78.135	-0.015	0.000
S10.000	S14	960 Winter	100	+30%	30/15 Summer				78.135	0.505	0.000
S1.005	S15	960 Winter	100	+30%	30/15 Summer				78.135	0.487	0.000
S1.006	S16	960 Winter	100	+30%	30/120 Summer				78.133	0.633	0.000
S1.007	S17	960 Winter	100	+30%	1/120 Summer				78.264	1.174	0.000
S1.008	S18	960 Winter	100	+30%					76.877	-0.199	0.000

PN	US/MH Name	Flow / Cap.	Overflow (l/s)	Half Drain Time (mins)	Pipe Flow (l/s)	Status	Level Exceeded
S1.000	S1	0.11			2.5	OK	
S1.001	S2	0.49		4	50.9	OK	
S2.000	S3	0.07		12	1.6	OK	
S3.000	S4	0.11		5	2.4	OK	
S1.002	S5	0.64		4	66.3	OK	
S4.000	S6	0.09		5	1.5	OK	
S5.000	S7	0.12		5	2.0	OK	
S6.000	S8	0.09		14	2.0	OK	
S1.003	S9	0.81			71.2	OK	

Summary of Critical Results by Maximum Level (Rank 1) for Storm

PN	US/MH Name	Flow / Cap.	Overflow (l/s)	Half Drain Time (mins)	Pipe Flow (l/s)	Status	Level Exceeded
S7.000	S10	0.43		15	14.7	OK	
S8.000	S11	0.10			2.0	OK	
S1.004	S12	0.81			95.5	OK	
S9.000	S13	0.02		240	0.2	OK	
S10.000	S14	0.02		400	0.3	SURCHARGED	
S1.005	S15	0.20			11.0	SURCHARGED	
S1.006	S16	0.04		960	4.0	SURCHARGED	
S1.007	S17	0.16			2.2	SURCHARGED	
S1.008	S18	0.03			2.2	OK	

Summary of Critical Results by Maximum Level (Rank 1) for Storm

Simulation Criteria

Areal Reduction Factor 1.000 Additional Flow - % of Total Flow 0.000
Hot Start (mins) 0 MADD Factor * 10m³/ha Storage 2.000
Hot Start Level (mm) 0 Inlet Coeffiecient 0.800
Manhole Headloss Coeff (Global) 0.500 Flow per Person per Day (l/per/day) 0.000
Foul Sewage per hectare (l/s) 0.000

Number of Input Hydrographs 0 Number of Offline Controls 0 Number of Time/Area Diagrams 0
Number of Online Controls 1 Number of Storage Structures 11 Number of Real Time Controls 0

Synthetic Rainfall Details

Rainfall Model FSR M5-60 (mm) 18.400 Cv (Summer) 0.750
Region Scotland and Ireland Ratio R 0.251 Cv (Winter) 0.840

Margin for Flood Risk Warning (mm) 20.0 DVD Status OFF
Analysis Timestep Fine Inertia Status OFF
DTS Status ON

Profile(s) Summer and Winter
Duration(s) (mins) 15, 30, 60, 120, 180, 240, 360, 480, 600, 720, 960, 1440, 2160, 2880, 4320, 5760, 7200, 8640, 10080
Return Period(s) (years) 1, 30, 100
Climate Change (%) 30, 30, 30

PN	US/MH Name	Storm	Return Period	Climate Change	First (X) Surcharge	First (Y) Flood	First (Z) Overflow	Overflow Act.	Water Level (m)	Surcharged Depth (m)
S1.000	S1	15 Winter	100	+30%					82.243	-0.117
S1.001	S2	15 Winter	100	+30%					82.173	-0.114
S2.000	S3	30 Summer	100	+30%					80.327	-0.123
S3.000	S4	15 Summer	100	+30%					80.335	-0.115
S1.002	S5	15 Winter	100	+30%					80.165	-0.092
S4.000	S6	15 Summer	100	+30%					79.330	-0.120
S5.000	S7	15 Summer	100	+30%					79.335	-0.115
S6.000	S8	30 Winter	100	+30%					79.531	-0.119
S1.003	S9	15 Winter	100	+30%					79.159	-0.068
S7.000	S10	30 Winter	100	+30%					79.268	-0.082
S8.000	S11	15 Summer	100	+30%					79.032	-0.118
S1.004	S12	15 Winter	100	+30%					78.824	-0.018
S9.000	S13	2880 Winter	100	+30%	30/2160 Winter				78.454	0.304
S10.000	S14	2880 Winter	100	+30%	30/15 Summer				78.455	0.825
S1.005	S15	2880 Winter	100	+30%	30/15 Summer				78.455	0.807
S1.006	S16	2880 Winter	100	+30%	1/720 Winter				78.455	0.955
S1.007	S17	2880 Winter	100	+30%	1/120 Summer				78.455	1.365
S1.008	S18	2880 Winter	100	+30%					76.870	-0.206

PN	US/MH Name	Flooded Volume (m³)	Flow / Cap.	Overflow (l/s)	Half Drain Time (mins)	Pipe Flow (l/s)	Status	Level Exceeded
S1.000	S1	0.000	0.11			2.5	OK	
S1.001	S2	0.000	0.49		4	50.9	OK	
S2.000	S3	0.000	0.07		12	1.6	OK	
S3.000	S4	0.000	0.11		5	2.4	OK	
S1.002	S5	0.000	0.64		4	66.3	OK	
S4.000	S6	0.000	0.09		5	1.5	OK	
S5.000	S7	0.000	0.12		5	2.0	OK	
S6.000	S8	0.000	0.09		14	2.0	OK	
S1.003	S9	0.000	0.81			71.2	OK	

Summary of Critical Results by Maximum Level (Rank 1) for Storm

PN	US/MH Name	Flooded Volume (m³)	Flow / Cap.	Overflow (l/s)	Half Drain Time (mins)	Pipe Flow (l/s)	Status	Level Exceeded
S7.000	S10	0.000	0.43		15	14.7	OK	
S8.000	S11	0.000	0.10			2.0	OK	
S1.004	S12	0.000	0.81			95.5	OK	
S9.000	S13	0.000	0.01		888	0.1	SURCHARGED	
S10.000	S14	0.000	0.01		1344	0.1	SURCHARGED	
S1.005	S15	0.000	0.09			5.1	SURCHARGED	
S1.006	S16	0.000	0.02		2592	1.9	SURCHARGED	
S1.007	S17	0.000	0.09			1.2	SURCHARGED	
S1.008	S18	0.000	0.02			1.2	OK	

Project:	O Connor Park, Ardagh, County Limerick
Project No.:	L099L
Calculation:	Attenuation 100-year
Calcs By:	Cronin Sutton Cotter Consulting Engineers
Checked By:	
Date:	3/6/22

CS CONSULTING GROUP
DUBLIN - LONDON - LIMERICK

Site Location:	Limerick		
Design Storm Return Period:	100 years		
Climate Change Factor:	40 %		
Soil Type:	2		
Net Site Area:	0.267 ha	Total site area is 0.55 Has	
Hardstand Area (Net Area):	0.267 ha	.....@	100% Impervious
Softstand Area:	0.00 ha	.....@	0% Impervious
Effective Impermeable Area:	0.267 ha		

Allowable Outflow	**Calculate**	
IH124: QBAR = 0.00108 x $AREA^{0.89}$ x $SAAR^{1.17}$ x $SOIL^{2.17}$		
AREA:	0.0027 km^2	
SAAR:	1119 mm	
SOIL:	0.3	
QBAR/ha	3.16 l/s/ha	
Allowable Outflow	**2.0 l/s**	**(Minimum Operational flow for hydrobrake)**

Storage required =	**205 m^3**	

Duration (min)	Rainfall 100-Year (mm)	Rainfall 100-Year with CCF (mm)	Intensity (mm/hr)	Discharge (Q = 2.71iA) (l/s)	Proposed Runoff (m^3)	Contiguous Land Runoff (m^3)	Total Runoff (m^3)	Allowable Outflow (m^3)	Storage Required (m^3)
5	14.3	20.0	240.2	174	52	0	52	1	52
10	19.9	27.9	167.2	121	73	0	73	1	71
15	23.4	32.8	131.0	95	85	0	85	2	84
30	29.1	40.7	81.5	59	106	0	106	4	103
60	36.3	50.8	50.8	37	132	0	132	7	125
120	45.2	63.3	31.6	23	165	0	165	14	150
180	51.4	72.0	24.0	17	187	0	187	22	166
240	56.3	78.8	19.7	14	205	0	205	29	177
360	64.0	89.6	14.9	11	233	0	233	43	190
540	72.8	101.9	11.3	8	265	0	265	65	201
720	79.8	111.7	9.3	7	291	0	291	86	205
1080	90.7	127.0	7.1	5	331	0	331	130	201
1440	99.4	139.2	5.8	4	362	0	362	173	190
2880	119.3	167.0	3.5	3	435	0	435	346	89
4320	136.4	191.0	2.7	2	497	0	497	518	-21
5760	151.8	212.5	2.2	2	554	0	554	691	-138
8640	179.5	251.3	1.7	1	655	0	655	1037	-382
11520	204.7	286.6	1.5	1	746	0	746	1382	-636
14400	228.2	319.5	1.3	1	832	0	832	1728	-896
17280	250.5	350.7	1.2	1	914	0	914	2074	-1160
23040	292.7	409.8	1.1	1	1067	0	1067	2765	-1697
28800	332.5	465.5	1.0	1	1213	0	1213	3456	-2243
36000	380.0	532.0	0.9	1	1386	0	1386	4320	-2934

Appendix E: Foul Sewer Network Design

CS CONSULTING
GROUP

FOUL SEWERAGE DESIGN

Design Criteria for Foul

Pipe Sizes STANDARD Manhole Sizes STANDARD

Industrial Flow (l/s/ha)	0.00	Add Flow / Climate Change (%)	0
Industrial Peak Flow Factor	0.00	Minimum Backdrop Height (m)	0.200
Flow Per Person (l/per/day)	150.00	Maximum Backdrop Height (m)	1.500
Persons per House	3.00	Min Design Depth for Optimisation (m)	1.200
Domestic (l/s/ha)	0.00	Min Vel for Auto Design only (m/s)	1.00
Domestic Peak Flow Factor	6.00	Min Slope for Optimisation (1:X)	500

Designed with Level Inverts

Network Design Table for Foul

PN	Length (m)	Fall (m)	Slope (1:X)	Area (ha)	Houses	Base Flow (l/s)	k (mm)	HYD SECT	DIA (mm)	Section Type	Auto Design
F1.000	44.094	1.917	23.0	0.000	4	0.0	1.500	o	150	Pipe/Conduit	
F1.001	22.056	1.050	21.0	0.000	2	0.0	1.500	o	150	Pipe/Conduit	
F1.002	6.949	0.463	15.0	0.000	4	0.0	1.500	o	150	Pipe/Conduit	
F1.003	31.741	1.176	27.0	0.000	0	0.0	1.500	o	150	Pipe/Conduit	

Network Results Table

PN	US/IL (m)	Σ Area (ha)	Σ Base Flow (l/s)	Σ Hse	Add Flow (l/s)	P.Dep (mm)	P.Vel (m/s)	Vel (m/s)	Cap (l/s)	Flow (l/s)
F1.000	82.000	0.000	0.0	4	0.0	7	0.41	1.83	32.4	0.1
F1.001	80.083	0.000	0.0	6	0.0	8	0.49	1.92	33.9	0.2
F1.002	78.400	0.000	0.0	10	0.0	10	0.64	2.27	40.1	0.3
F1.003	77.937	0.000	0.0	10	0.0	11	0.53	1.69	29.9	0.3

Manhole Schedules for Foul

MH Name	MH CL (m)	MH Depth (m)	MH Connection	MH Diam.,L*W (mm)	Pipe Out PN	Pipe Out Invert Level (m)	Pipe Out Diameter (mm)	Pipes In PN	Pipes In Invert Level (m)	Pipes In Diameter (mm)	Backdrop (mm)
F1	83.450	1.450	Open Manhole	1200	F1.000	82.000	150				
F2	81.500	1.417	Open Manhole	1200	F1.001	80.083	150	F1.000	80.083	150	
F3	80.000	1.600	Open Manhole	1200	F1.002	78.400	150	F1.001	79.033	150	633
F4	78.500	0.563	Open Manhole	1200	F1.003	77.937	150	F1.002	77.937	150	
F	78.500	1.739	Open Manhole	0		OUTFALL		F1.003	76.761	150	

MH Name	Manhole Easting (m)	Manhole Northing (m)	Intersection Easting (m)	Intersection Northing (m)	Manhole Access	Layout (North)
F1	527800791.787	638805691.377	527800791.787	638805691.377	Required	
F2	527800835.244	638805698.844	527800835.244	638805698.844	Required	
F3	527800836.757	638805720.848	527800836.757	638805720.848	Required	
F4	527800841.211	638805726.182	527800841.211	638805726.182	Required	
F	527800872.636	638805721.717			No Entry	

PIPELINE SCHEDULES for Foul

Upstream Manhole

PN	Hyd Sect	Diam (mm)	MH Name	C.Level (m)	I.Level (m)	D.Depth (m)	MH Connection	MH DIAM., L*W (mm)
F1.000	o	150	F1	83.450	82.000	1.300	Open Manhole	1200
F1.001	o	150	F2	81.500	80.083	1.267	Open Manhole	1200
F1.002	o	150	F3	80.000	78.400	1.450	Open Manhole	1200
F1.003	o	150	F4	78.500	77.937	0.413	Open Manhole	1200

Downstream Manhole

PN	Length (m)	Slope (1:X)	MH Name	C.Level (m)	I.Level (m)	D.Depth (m)	MH Connection	MH DIAM., L*W (mm)
F1.000	44.094	23.0	F2	81.500	80.083	1.267	Open Manhole	1200
F1.001	22.056	21.0	F3	80.000	79.033	0.817	Open Manhole	1200
F1.002	6.949	15.0	F4	78.500	77.937	0.413	Open Manhole	1200
F1.003	31.741	27.0	F	78.500	76.761	1.589	Open Manhole	0

Appendix F: Met Eireann and HR Wallingford Data

CS CONSULTING
GROUP

Met Eireann
Return Period Rainfall Depths for sliding Durations
Irish Grid: Easting: 127850, Northing: 138786,

	Interval		Years													
DURATION	6months,	1year,	2,	3,	4,	5,	10,	20,	30,	50,	75,	100,	150,	200,	250,	500,
5 mins	3.3,	4.4,	5.0,	5.8,	6.4,	6.8,	8.2,	9.8,	10.8,	12.1,	13.3,	14.3,	15.7,	16.7,	17.6,	N/A ,
10 mins	4.5,	6.1,	6.9,	8.1,	8.9,	9.5,	11.5,	13.6,	15.0,	16.9,	18.6,	19.9,	21.8,	23.3,	24.6,	N/A ,
15 mins	5.3,	7.2,	8.1,	9.5,	10.5,	11.2,	13.5,	16.0,	17.6,	19.9,	21.9,	23.4,	25.7,	27.4,	28.9,	N/A ,
30 mins	7.1,	9.4,	10.6,	12.3,	13.5,	14.4,	17.2,	20.2,	22.2,	24.9,	27.3,	29.1,	31.9,	34.0,	35.7,	N/A ,
1 hours	9.3,	12.3,	13.8,	15.9,	17.3,	18.4,	21.9,	25.6,	28.0,	31.3,	34.1,	36.3,	39.5,	42.0,	44.0,	N/A ,
2 hours	12.4,	16.0,	17.9,	20.6,	22.3,	23.7,	27.9,	32.4,	35.3,	39.2,	42.6,	45.2,	49.0,	52.0,	54.4,	N/A ,
3 hours	14.6,	18.8,	20.9,	23.9,	25.9,	27.4,	32.1,	37.2,	40.4,	44.8,	48.5,	51.4,	55.7,	58.9,	61.5,	N/A ,
4 hours	16.4,	21.0,	23.3,	26.6,	28.8,	30.4,	35.5,	41.0,	44.5,	49.2,	53.2,	56.3,	60.9,	64.3,	67.2,	N/A ,
6 hours	19.3,	24.5,	27.2,	30.9,	33.3,	35.2,	40.9,	47.0,	50.9,	56.1,	60.6,	64.0,	69.1,	72.9,	76.0,	N/A ,
9 hours	22.7,	28.7,	31.7,	35.9,	38.7,	40.7,	47.2,	54.0,	58.3,	64.1,	69.1,	72.8,	78.4,	82.6,	86.0,	N/A ,
12 hours	25.6,	32.1,	35.4,	40.0,	42.9,	45.2,	52.2,	59.5,	64.2,	70.4,	75.7,	79.8,	85.7,	90.2,	93.9,	N/A ,
18 hours	30.1,	37.6,	41.2,	46.4,	49.8,	52.3,	60.1,	68.3,	73.5,	80.4,	86.3,	90.7,	97.3,	102.2,	106.3,	N/A ,
24 hours	33.8,	42.0,	46.0,	51.7,	55.3,	58.0,	66.5,	75.4,	80.9,	88.3,	94.7,	99.4,	106.4,	111.7,	116.0,	130.3,
2 days	44.9,	54.6,	59.3,	65.9,	70.1,	73.2,	82.8,	92.8,	99.0,	107.2,	114.1,	119.3,	126.9,	132.6,	137.2,	152.6,
3 days	54.4,	65.4,	70.7,	78.0,	82.7,	86.2,	96.8,	107.7,	114.4,	123.3,	130.8,	136.4,	144.6,	150.7,	155.6,	171.9,
4 days	63.1,	75.2,	81.0,	89.0,	94.1,	97.9,	109.4,	121.1,	128.3,	137.9,	145.8,	151.8,	160.5,	166.9,	172.1,	189.3,
6 days	79.1,	93.2,	99.9,	109.1,	114.9,	119.2,	132.2,	145.4,	153.5,	164.1,	173.0,	179.5,	189.1,	196.2,	201.9,	220.6,
8 days	94.0,	109.8,	117.3,	127.6,	134.0,	138.8,	153.1,	167.6,	176.4,	188.0,	197.6,	204.7,	215.1,	222.8,	228.9,	249.0,
10 days	108.2,	125.6,	133.8,	145.0,	152.0,	157.2,	172.7,	188.4,	197.9,	210.3,	220.6,	228.2,	239.3,	247.5,	254.0,	275.4,
12 days	121.9,	140.8,	149.7,	161.8,	169.3,	174.9,	191.5,	208.2,	218.3,	231.5,	242.5,	250.5,	262.3,	270.9,	277.8,	300.3,
16 days	148.4,	170.1,	180.1,	193.8,	202.3,	208.5,	227.2,	245.9,	257.1,	271.7,	283.8,	292.7,	305.6,	315.1,	322.6,	347.2,
20 days	174.1,	198.2,	209.4,	224.5,	233.9,	240.7,	261.2,	281.6,	293.9,	309.8,	322.9,	332.5,	346.5,	356.7,	364.9,	391.3,
25 days	205.5,	232.4,	244.8,	261.6,	272.0,	279.6,	302.1,	324.5,	337.9,	355.3,	369.6,	380.0,	395.2,	406.3,	415.1,	443.6,

NOTES:
N/A Data not available
These values are derived from a Depth Duration Frequency (DDF) Model
For details refer to:
'Fitzgerald D. L. (2007), Estimates of Point Rainfall Frequencies, Technical Note No. 61, Met Eireann, Dublin',
Available for download at www.met.ie/climate/dataproducts/Estimation-of-Point-Rainfall-Frequencies_TN61.pdf

Print | Close Report

HR Wallingford
Working with water

Greenfield runoff rate estimation for sites

www.uksuds.com | Greenfield runoff tool

Calculated by:	Dominic Flanagan
Site name:	O Connor Park
Site location:	Ardagh

This is an estimation of the greenfield runoff rates that are used to meet normal best practice criteria in line with Environment Agency guidance "Rainfall runoff management for developments", SC030219 (2013) , the SuDS Manual C753 (Ciria, 2015) and the non-statutory standards for SuDS (Defra, 2015). This information on greenfield runoff rates may be the basis for setting consents for the drainage of surface water runoff from sites.

Site Details

Latitude:	52.49608° N
Longitude:	9.0636° W
Reference:	1156011112
Date:	Jun 23 2022 10:49

Runoff estimation approach IH124

Site characteristics

Total site area (ha): .267

Methodology

Q_{BAR} estimation method:	Calculate from SPR and SAAR
SPR estimation method:	Calculate from SOIL type

Soil characteristics	Default	Edited
SOIL type:	2	2
HOST class:	N/A	N/A
SPR/SPRHOST:	0.3	0.3

Hydrological characteristics	Default	Edited
SAAR (mm):	1119	1119
Hydrological region:	13	13
Growth curve factor 1 year:	0.85	0.85
Growth curve factor 30 years:	1.65	1.65
Growth curve factor 100 years:	1.95	1.95
Growth curve factor 200 years:	2.15	2.15

Notes

(1) Is Q_{BAR} < 2.0 l/s/ha?

When Q_{BAR} is < 2.0 l/s/ha then limiting discharge rates are set at 2.0 l/s/ha.

(2) Are flow rates < 5.0 l/s?

Where flow rates are less than 5.0 l/s consent for discharge is usually set at 5.0 l/s if blockage from vegetation and other materials is possible. Lower consent flow rates may be set where the blockage risk is addressed by using appropriate drainage elements.

(3) Is SPR/SPRHOST ≤ 0.3?

Where groundwater levels are low enough the use of soakaways to avoid discharge offsite would normally be preferred for disposal of surface water runoff.

Greenfield runoff rates	Default	Edited
Q_{BAR} (l/s):	0.84	0.84
1 in 1 year (l/s):	0.72	0.72
1 in 30 years (l/s):	1.39	1.39
1 in 100 year (l/s):	1.64	1.64
1 in 200 years (l/s):	1.81	1.81

Appendix G: Hydrobrake Information

CS CONSULTING
GROUP

HRD TECHNOLOGIES LTD

Design Layout with Approximate Dimensions of a
94 SXH Hydro-Brake® Flow Control

Project Information

Our Reference : FOR INTERNAL USE ONLY
Client :
Site :

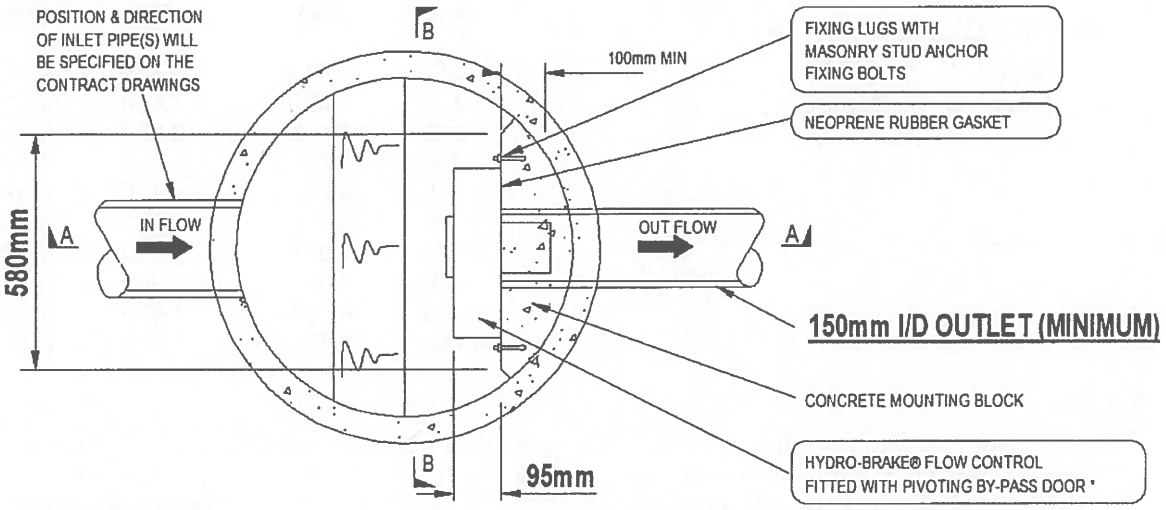

PLAN

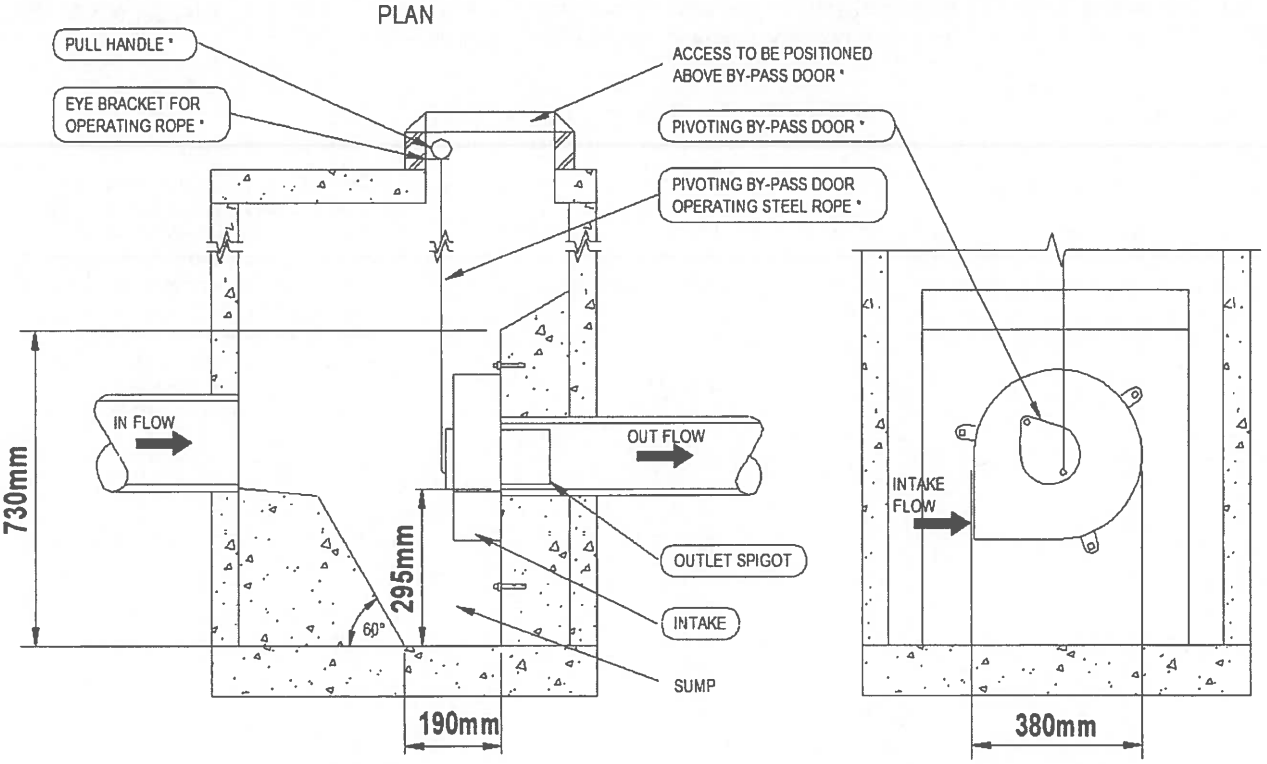

SECTION A-A

SECTION B-B

IMPORTANT: ⬭ LIMIT OF HRD TECHNOLOGIES LTD SUPPLY
THE DEVICE WILL BE HANDED TO SUIT SITE CONDITIONS
FOR SITE SPECIFIC DETAILS AND MINIMUM CHAMBER SIZE REFER TO HRD TECHNOLOGIES LTD
ALL CIVIL AND INSTALLATION WORK BY OTHERS
* WHERE SUPPLIED

FOR ILLUSTRATIVE PURPOSES ONLY

fbritton	January 22, 2018	17:12	HBFCDesign Version 3.6.4	XH_D_SR_(1.0) (3.0)

Tel : 00 353 1 4013964 **Fax : 00 353 1 4013978**

HRD Technologies Ltd

94mm Type SXH Hydro-Brake® Flow Control

Project Information

Our Reference: FOR INTERNAL USE ONLY
Client:
Site:

Technical Specification Criteria

Primary Design Point (A)
Head = 1.060 m
Flow = 5.220 l/s

Control Points	Head (m)	Flow (l/s)
Flush-Flo™ (B)	0.217	4.110
Kick-Flo® (C)	0.405	3.777

Head (m)	Flow (l/s)	Head (m)	Flow (l/s)
0.075	1.975	0.825	4.621
0.150	3.895	0.900	4.817
0.225	4.105	0.975	5.008
0.300	3.938	1.050	5.195
0.375	3.795	1.125	5.376
0.450	3.790	1.200	5.551
0.525	3.887	1.275	5.722
0.600	4.043	1.350	5.887
0.675	4.227	1.425	6.049
0.750	4.422	1.500	6.206

Design Advice

The head / flow characteristics of this 94mm Type SXH Hydro-Brake® Flow Control are unique, fully verifiable and proven by computational design, physical modelling and in-situ testing. The use of any other flow control will invalidate any design based on this data which may lead to adverse hydraulic effects including loss of upstream storage, under /over discharge and increased potential for flooding, any of which could cause non-compliance with the original hydraulic model.

Specific Head / Flow characteristic for 94mm Type SXH

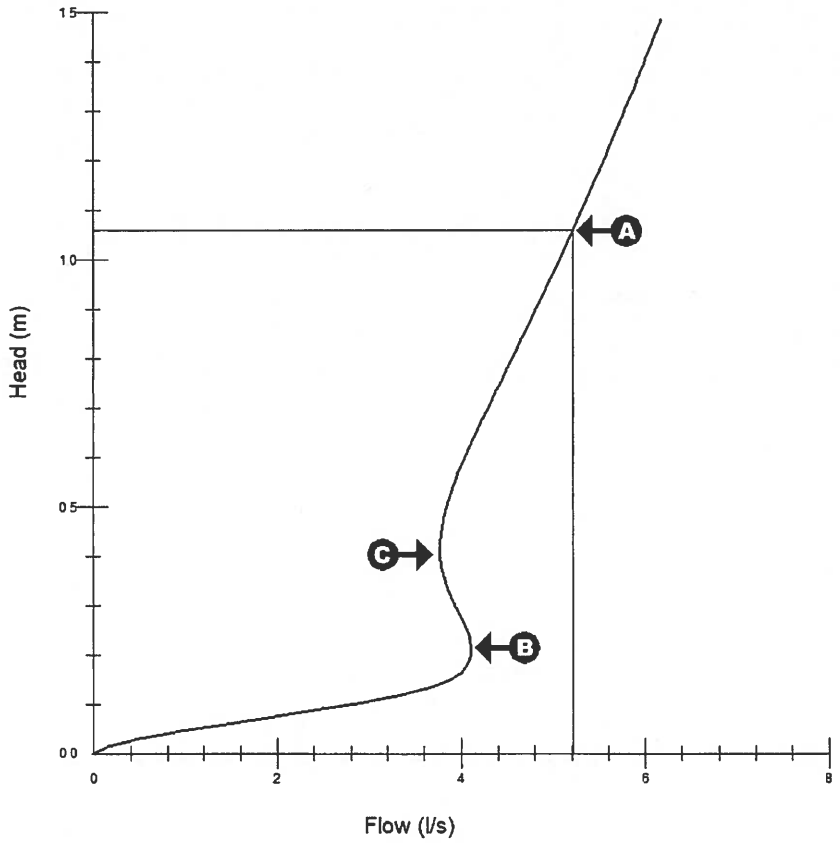

Flush-Flo™ (B)

The point at which the vortex begins to initiate and have a throttling effect. This point on the Hydro-Brake® curve is usually much nearer to the maximum design flow (Design Point) than other vortex flow controls leading to more water passing through the unit during the earlier stages of a storm, thus reducing the amount of water that needs to be stored upstream.

Kick-Flo® (C)

The point at which the vortex has initiated and at which the curve begins to return back to follow the orifice curve and reach the same design point or desired head / flow condition.

stormwater

Hydro-Brake® Chamber User Manual

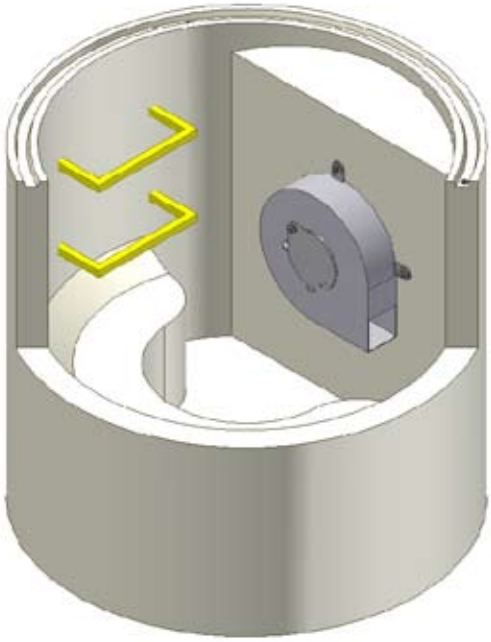

Hydro-Brake® Chamber and Hydro-Brake® Flow Control

turning water around ...

Innovative Joint Venture Results in a Stormwater Control System

The Challenge

No Benching, No Coring, No Problem!

- To create a simple, robust all in one stormwater control system.
- Eliminate the need to core/drill the chamber on site.
- Ensure correct benching of flow control chamber.
- Guarantee correct installation of the flow control.
- Simple, one step installation.

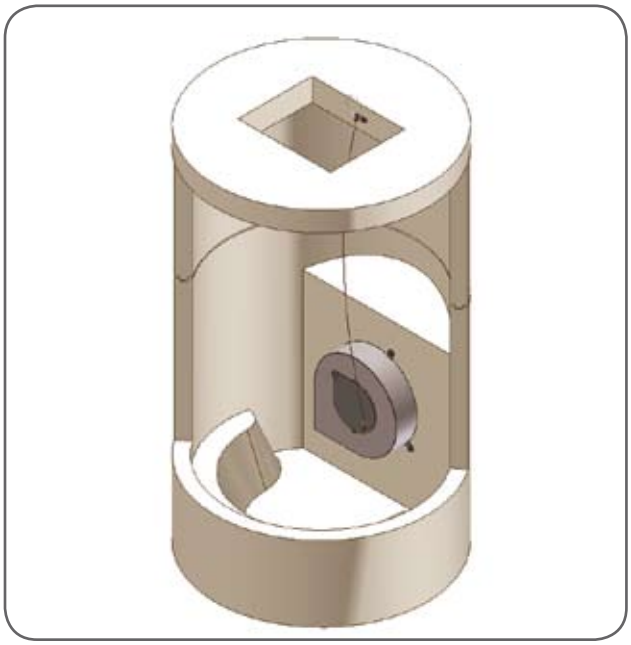

The Solution

In a joint venture Hydro International and CPM Group Ltd have produced a series of easy to install, concrete preformed Hydro-Brake® Chambers.

The Hydro-Brake® Chamber

What is it?

The Hydro-Brake® Chamber comprises a precast reinforced concrete chamber base containing a bespoke Hydro-Brake® Flow Control.

The Hydro-Brake® Chamber is delivered to site ready for immediate installation. As the Hydro-Brake® Flow Control is already installed in the chamber complete with preformed benching (preformed benching with standard units only), installation is cut to a fraction of the time compared to conventional methods. Inlet hole(s) are cored or formed prior to delivery and are made to suit exact site requirements. A range of outlet pipe sizes are also available to suit site requirements.

Once lifted into position, the connecting pipework can be installed. Depending on the overall depth of chamber required, further concrete rings can be added and the cover slab positioned (additional concrete rings and cover slab sold separately).

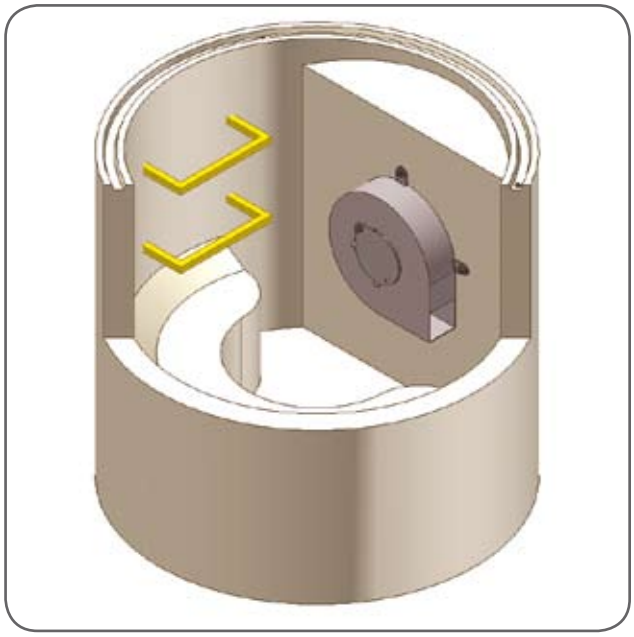

Figure 1 - General Overview of Hydro-Brake® Chamber Incorporating the Hydro-Brake® Flow Control

Applications

Hydro-Brake® Flow Controls can be used wherever there is a need to limit the rate of forward flow of surface water within a drainage system. Typical schemes include:

- Source Control/SUDS Schemes.
- Traditional Attenuation Storage.
- Energy Dissipation / Velocity Control.

Advantages

- **Bespoke Design**
  Every Hydro-Brake® Chamber includes a made-to-measure Hydro-Brake® Flow Control designed to suit the site specific design. Standard units also have benching for the flow control preformed in the chamber. Step Irons can also be pre-fitted within the chamber if required.

- **Inlets / Outlets**
  Inlet hole(s) of up to 600 m diameter ID can be cored / formed to the customer's exact specification. A range of outlet sizes are available to suit.

- **Rapid Installation**
  The Hydro-Brake® Chamber is delivered to site as one complete unit with the Hydro-Brake® Flow Control already installed in position. This guarantees the flow control is fitted correctly. No benching or coring is required.

- **Simple Construction**
  The strength of the reinforced concrete chamber eliminates the need for a concrete surround.

- **Cost Saving**
  The use of a Hydro-Brake® Flow Control can reduce the upstream storage volume requirement by up to 30%. This can significantly reduce capital expenditure.

- **Minimal Maintenance**
  The integral Hydro-Brake® Flow Control is totally self-activating, has no moving parts and requires no power to operate. The Hydro-Brake® outlet openings are 3-6 times greater than conventional flow controls thus reducing the risk of blockage.

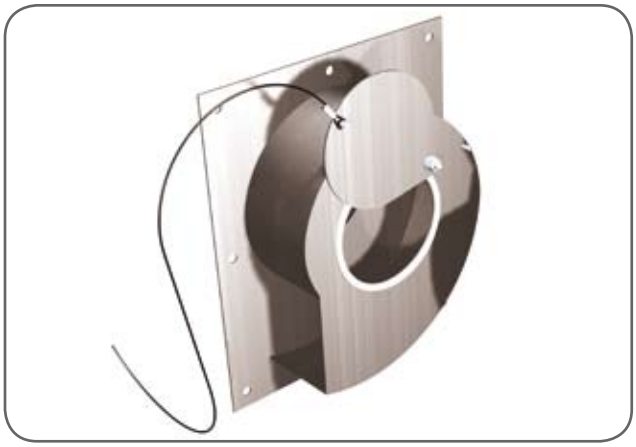

Figure 2 - Hydro-Brake Flow Control with Integral Bypass Door

The Hydro-Brake® Flow Control

What is it?

The Hydro-Brake® Flow Control is a device for controlling liquid flow. It is self-activating, utilising the upstream hydraulic head to generate an air filled vortex within the centre of the casing.

How it Works

The Hydro-Brake® Flow Control is a self-activating vortex flow control device that provides superior hydraulic performance over conventional flow regulators with patented features that reduce maintenance requirements.

Because Hydro-Brake® Flow Controls harness the energy inherent in the flow field they have no moving parts and no energy requirements. With clear openings up to 600% larger than conventional flow control devices, the risk of blocking is reduced to an absolute minimum.

In addition, the unique head/discharge characteristics can reduce storage volume requirements, lowering project costs.

The design consists of an intake, a volute and an outlet. The configuration is critical to ensure precise discharge control. Flow is directed tangentially into a volute to form a vortex. High peripheral velocities induce an air filled core with a resulting back pressure that reduces the discharge.

The Hydro-Brake® Flow Control out-performs conventional flow control devices. Its unique S-shaped head/discharge curve, which has been devised from extensive systematic modelling and field testing, comprises two distinct phases (see figure below). As the head increases a transition takes place from free flow (lower portion of the curve) to vortex controlled flow (upper portion of the curve).

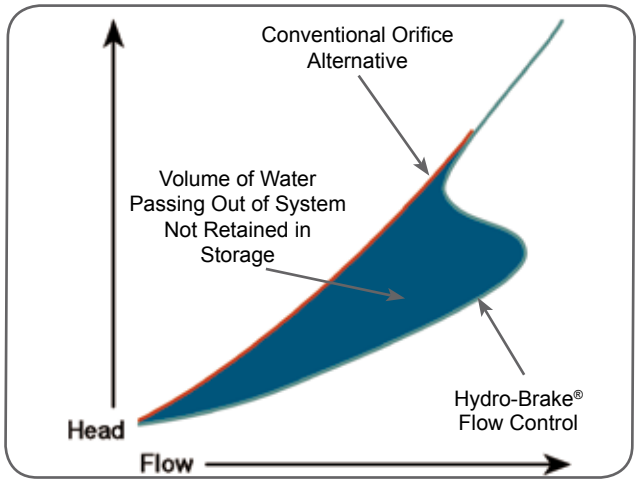

Figure 3 - Discharge Characteristics

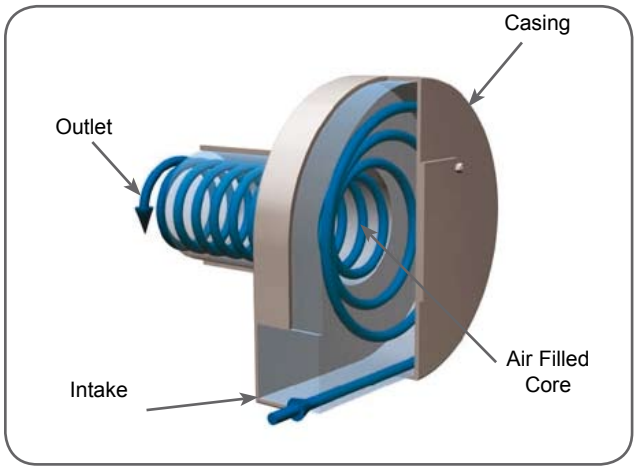

Figure 4 - Flow Pattern within 'S' Type Unit Head/Flow Relationship

The Hydro-Brake® Flow Control thereby achieves maximum design discharge rates at lower heads than conventional controls. As a result, storage requirements can be reduced by up to 30% (as shown below), significantly reducing project costs.

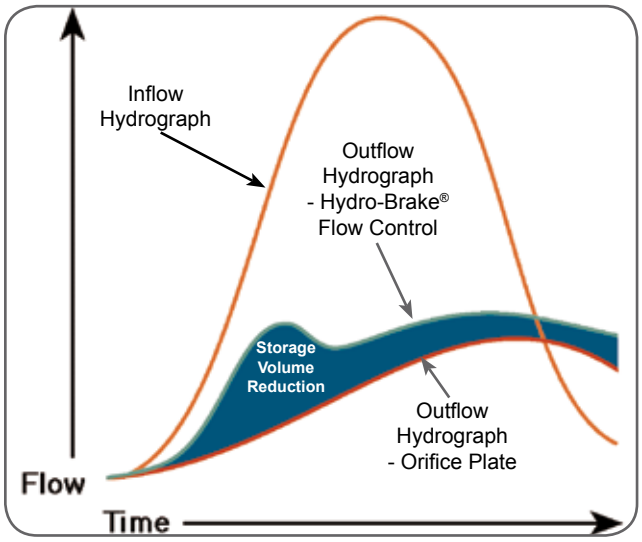

Figure 5 - Storage Routing

Head/discharge curves are available for every model type and size. In addition, the Hydro-Brake® Flow Control sizing engine is built into Micro Drainage - the industry-standard drainage design suite (Win*Des*) and the drainage area planning suite (Win*Dap*). This allows the designer full control over unit selection ensuring the most efficient Hydro-Brake® Flow Controls are used on any given project.

The Hydro-Brake® Flow Control

Advantages

- No moving parts.
- Large open area (reduced risk of blockage)
- No power requirements.
- Self-activating and self-cleaning.
- Highest performing passive flow control.
- Integral bypass allowing access for rodding / jetting.
- BBA applied for.

Pivoting Bypass Door

The Hydro-Brake® Flow Control is fitted with an integral pivoting bypass door built onto the front face of the unit. If a blockage occurs it is likely to occur on the inlet of a flow control. The bypass door is fitted with a stainless steel wire that is run to cover level. If a blockage does occur the wire is pulled from cover level, the door opens exposing a large aperture on the front plate of the unit allowing the system to be drained of water. Once the water level within the manhole subsides the unit can be cleared.

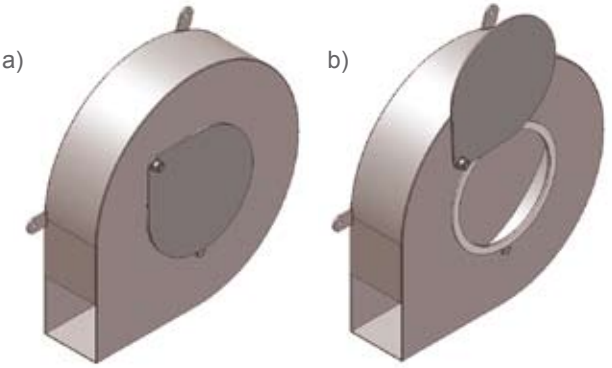

Figure 6 - Hydro-Brake® Flow Control with bypass door; a) closed - normal operation, b) fully open - emergency drain down.

Our Most Popular Types of Hydro-Brake® Flow Controls

Type SH, SXH and SMXH (see Figure 6 above)

These three models are the only units applicable to the preformed Hydro-Brake® Chamber. They are specifically designed to control stormwater flow. These units have a horizontal discharge and require a sump / catch pit below the unit.

Flow Range: (for use within surface water systems only)
Typically 2-700 l/s (2-150 l/s if used in conjunction within a preformed Hydro-Brake® Chamber).

Although not currently possible to package within a prefabricated chamber range, the following is a list of alternative Hydro-Brake® Flow Controls available through Hydro International.

Type SV, SMV and SXV

Similar to the Type SH but with a vertical outlet. Can be used in foul and combined sewer flow control applications.

Flow Range:

Typically 2-300 l/s.

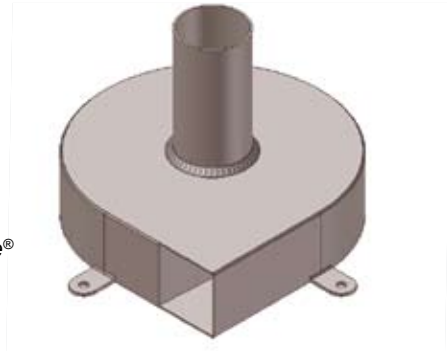

Figure 7 - Type SXV Hydro-Brake® Flow Control

Type C

Provides suitable control for stormwater, foul and combined sewer flows. The Type C has a pronounced S-shaped head/ discharge curve, allowing dry weather flow to pass without restriction and reducing overall storage requirements. Generally used for high flow applications. Applications include control of watercourses.

Flow Range:

Surface Water:
Typically 90 l/s upwards.

Foul Water:
Typically 240 l/s upwards.

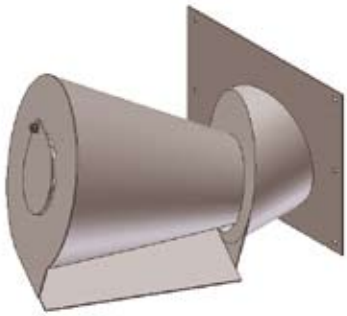

Figure 8 - Type C Hydro-Brake® Flow Control

Type CH and CX

Similar to the Type C, the box intake of the Type CH provides a larger opening for reducing the risk of blockage during low flows. Applications include CSO's storage tanks, inlet works and flow balancing.

Flow Range:

Surface Water:
Typically 4 l/s upwards.

Foul Water:
Typically 16 l/s upwards.

Figure 9 - Type CX Hydro-Brake® Flow Control

Please note, other types of Hydro-Brake® Flow Controls are available. Please contact our professional engineering team for advice on unit selection to provide a solution to your particular need.

Standard Chamber Design

The Hydro-Brake® Flow Control manufactured by Hydro International is incorporated into either a one-piece 1200 mm or 1500 mm diameter precast reinforced concrete chamber with preformed benching and headwall manufactured by CPM Group Ltd. The chamber is Kite marked and fabricated using a base unit complying with BS EN 1917:2002. The chambers are available in two sizes, both of which can accommodate either an SH, SXH or SMXH design of Hydro-Brake® Flow Control Device.

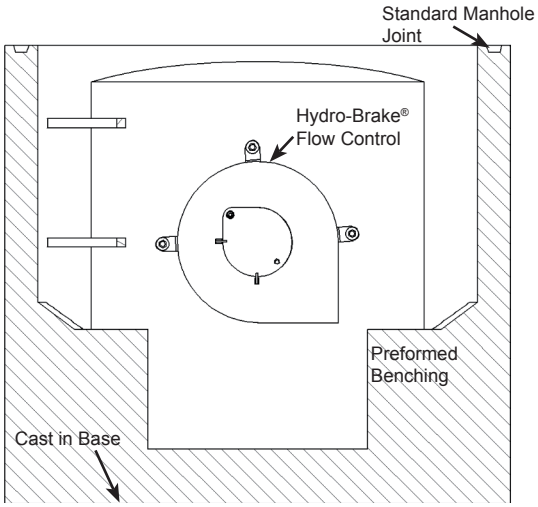

Figure 10 - Front Elevation Through Hydro-Brake® Chamber

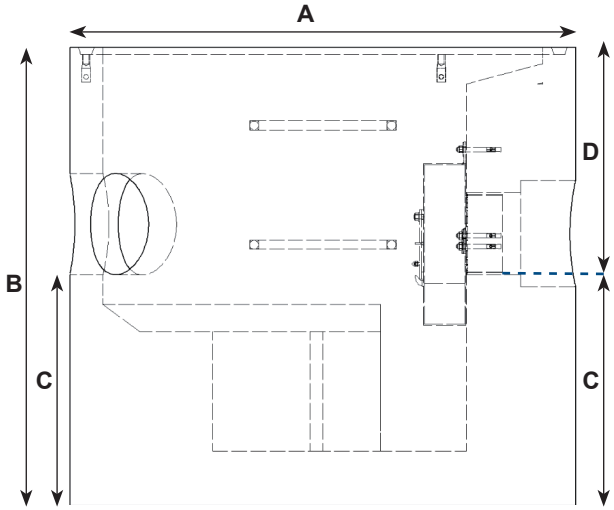

Figure 11 - Side Elevation Through Hydro-Brake® Chamber

Chamber Design Table

A Diameter (mm)	B Height (mm)	C Height to Invert (mm)	D Height from Invert to Top (mm)	Weight (Kg)	Outlet Size Options (mm)	Maximum Inlet Diameter (mm)
1200	1250	630	620	2150	150, 225 &300	300
1500	1750	710	1040	3970	225/300 & 375/450	600

The reinforced precast one piece chamber reduces the need for concrete surround. The design of the benching is such that up to four inlet pipes of the maximum diameter (dependant on chamber diameter) can be incorporated into the chamber. Additional smaller sized inlets can also be included in the chamber (please check with Hydro International). The semi-circular benching allows easy access to the sump area for sediment removal.

The reinforced precast concrete chambers are manufactured using a combined Portland cement and pfa manufactured to meet Design Class 4 sulphate conditions as defined in BRE Special Digest 'Concrete in Aggressive Ground' Part 4 Design for Specific Precast Products.

Design Procedure

On receipt of:

- Head - Depth from invert level of outlet to the top water level upstream.
- Flow - Required discharge.
- Type of application - ie. foul, combined or stormwater.
- Any details of the proposed application, manhole details or control chamber proposals.

We provide free of charge:

- Hydro-Brake® Flow Control Unit specification.
- Head/Discharge Characteristics.
- Typical installation drawing (including Hydro-Brake® Chamber if applicable).
- Quotation for the supply of the flow control (and chamber if applicable).

If a Hydro-Brake® Chamber is required then we also need information relating to the interconnecting pipework (eg. plastic twinwall, clay pipe), inside pipe diameters and number inlets required along with confirmation of the outlet pipe size.

Hydro-Brake® Chamber Additional Options

In addition to the standard design shown in Figure 2, page 3, there are a number of alternative Hydro-Brake® Chamber designs available to suit different applications and specifications.

Option 1 - Hydro-Brake® Chamber with High Level Overflow

This chamber includes an emergency overflow. The design incorporates a cored hole at the desired height to accommodate a reverse backdrop pipe arrangement.

This is an alternative design to a weir wall configuration and can be incorporated in the 1200 mm, 1500 mm and 2000 mm diameter chambers (see Option 3).

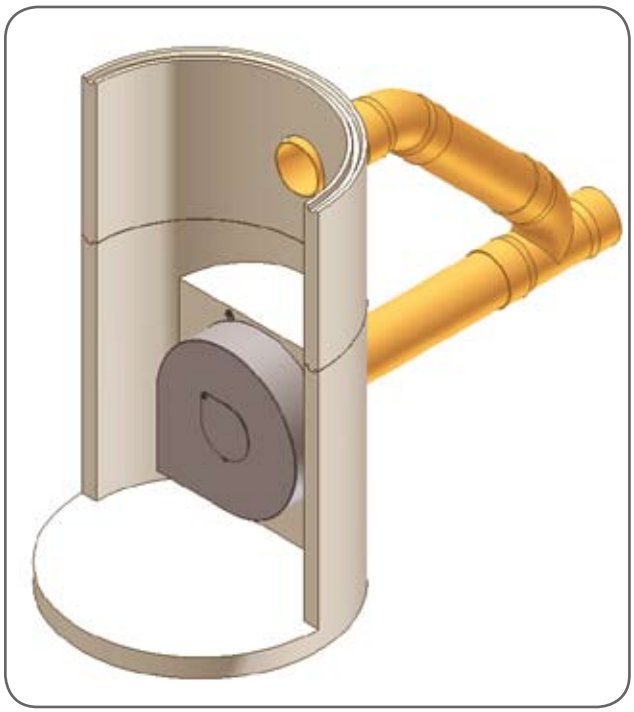

Figure 12 - 3D Section Showing Hydro-Brake® Chamber with High Level Overflow

Option 2 - Hydro-Brake® Chamber with Adjacent Penstock

Although the Hydro-Brake® Flow Control includes an integral bypass allowing for drain down and full rodding / jetting, certain Water Companies may also require a completely separate bypass. In these instances we can provide a 150, 225 or 300 mm diameter penstock (suitable for up to 6 m on seating pressure).

The penstock is mounted on the headwall by the side of the Hydro-Brake® Flow Control which can be opened for emergency discharge.

Please note that this design is only available in the 1500 mm and 2000 mm diameter chambers. If required, both the Hydro-Brake® Flow Control and penstock can be mounted on a weir wall (see Option 3).

Figure 13 - 3D Section Showing Hydro-Brake® Chamber with Adjacent Penstock

Option 3 - Hydro-Brake® Chamber with Integral Weir Wall

This chamber design includes a reinforced concrete weir wall, complete with pre-mounted Hydro-Brake® Flow Control. The weir wall can be constructed at various heights to suit design requirements.

As with the previous option, the weir wall configuration can an also include a penstock located alongside the Hydro-Brake® Flow Control (if required).

Please note that this option is only available with the 2000 mm diameter chamber.

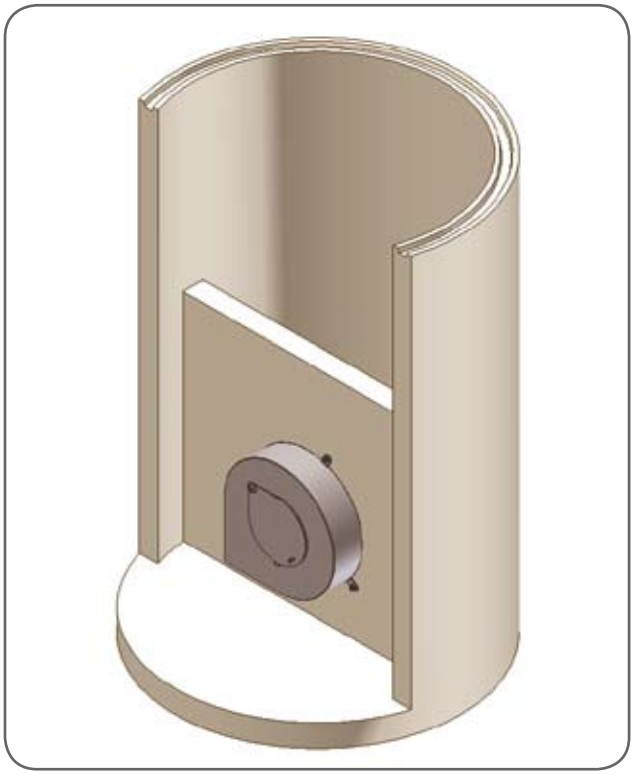

Figure 14 - 3D Section Showing Hydro-Brake® Chamber with Integral Weir Wall

Option 4 - Hydro-Brake® Chamber with Complex Flow Controls

With increasing legislation requesting staged discharge rates linked to an assortment of return periods, solving for a single flow rate under a given return period is not always acceptable. Under these circumstances the outflow hydrograph from the control chamber (the point at which the forward flow is restricted) is particularly complicated and cannot usually be achieved with the use of a single flow control device.

With the use of appropriate modelling software a solution can be found using 'complex flow controls'- placing two or more controls in parallel. Please contact Hydro International directly to discuss your particular requirements.

Figure 15 - 3D Section Showing Hydro-Brake® Chamber with Complex Flow Controls

Installation Instructions

1. The excavation must be carried out in accordance with all relevant Health & Safety requirements.
2. The chamber has been manufactured with a reinforced concrete base and can be placed on either a prepared base of 100 mm layer of pipe bedding or 75 mm of lean mix concrete depending on ground conditions. Please check with Hydro International if in doubt.
3. Off-load the chamber and install in the prepared excavation ensuring the inlet(s) and outlet points are correctly orientated.
4. Once the unit has been checked for line and level the inlet / outlet pipes can now be connected into the chamber.
5. Connecting and sealing of the inlet / outlet pipes into the chamber depends on the type of pipe being used. Please refer to the typical jointing procedure below:

Solid Wall Pipes (ie. Clay / Single Skin Plastic Pipe)

a) Ensure the seal is clean from any debris.
b) Chamfer the edge of the connecting pipe and lubricate it with jointing grease.
c) Centre the end of the pipe and push it into the seal, so that the pipe end is flush with the inner wall.

Rough / Structural Wall Pipe (ie. Concrete or Twinwall Plastic Pipe)

a) The pipe should enter the pre-bored entry / exit to the chamber.
b) This pipework should be grouted into the hole with a suitably strong mortar keeping the axis of the pipe concentric to the axis of the hole. The mortar can then be placed around the full circumference of the pipe to help ensure a watertight joint.

6. The chamber can now be backfilled. No concrete surround is required as the inherent strength of the reinforced concrete chamber requires no additional support. Suitable as dug material can be used for backfill and compacted in layers, unless otherwise required by the contract specification. Backfilling around the chamber shall be undertaken in such a manor as to avoid uneven loading or damage.
7. The Hydro-Brake® Chamber has been manufactured with standard tongue and groove joints so additional chamber rings can be fitted above to obtain the required height / level (available at extra cost).
8. Once the cover slab has been positioned, fasten the pivoting bypass rope to the underside of the slab using the brackets provided. This will allow the bypass door to be operated from surface level (if required).

Figure 16 - Chamber being lowered into position.

Figure 19 - Checking Orientation/Level of Chamber

Figure 20 - Pipework Connected In Situ

Figure 21 - Close up of Hydro-Brake® Flow Control within Chamber

Integrated Stormwater Systems

In addition to the Hydro-Brake® Chamber, Hydro International also provides other solutions for commercial developers and designers. Combined, our products provide comprehensive sustainable solutions to meet the most stringent regulations.

Hydro International is committed to providing integrated products and solutions that support Sustainable Drainage Systems.

Our Stormwater Product Portfolio includes:

Stormcell® Stormwater Storage System

A low cost underground storage system suitable for installation beneath roads, car parks and amenity areas. Stormcell® is installed utilising a patented pipework system which prevents the entry of silts and grits into the storage volume.

Stormbloc® Stormwater Storage and Infiltration System

A block type structure with a patented maintenance / inspection tunnel for providing underground surface water infiltration and soakaway systems.

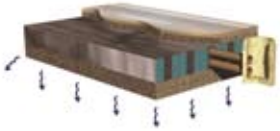

Hydro-Brake® Flow Control

A self-activating vortex flow control that provides superior hydraulic performance over conventional flow regulators with patented features that reduce maintenance requirements.

Downstream Defender®

An advanced hydrodynamic vortex separator designed to remove sediment, floatables and associated pollutants from stormwater.

First Defense®

A simple, robust hydrodynamic vortex separator for removing sediment and floatables from stormwater while at the same time functioning as an effective catch basin.

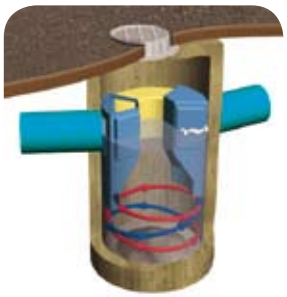

Up-Flo™ Filter

A high-rate modular stormwater treatment filter featuring a patented upward flow path with a unique Drain Down design. The filter targets a wide range of pollutants including floatable debris, fine sediments, nutrients, metals, oils and grease, organics and bacteria.

StormBank™ Rainwater Harvester

The latest addition to the stormwater range of products. The StormBank™ can be used to replace treated mains water for use in toilets, garden and outdoor use. A StormBank™ Garden system is also available exclusively for garden watering.

Save the Rain™ Campaign

A major new campaign to make water saving 'second nature' in every UK household and protect Britain's dwindling water resources has been launched under the banner "Save the Rain™". The campaign's vision is to make Rainwater Harvesting a commonplace option in UK homes. The campaign is being run in association with British Water and the UKRHA and is sponsored by Hydro International.

Join the Campaign
Visit: www.savetherain.info
Sign our petition and lobby the environment minister

For more than 25 years Hydro International's commitment to product research and development has set industry standards. Our Hydro-Brake® Flow Controls are harnessing water throughout the world.

setting the standard
technology driving
design

Our History

Hydro International was formed in 1980 to promote the hydrodynamic separator and vortex flow control technology around the world.

We have also been promoting source control and what are now commonly known as Sustainable Drainage Systems (SUDS) for well over a decade.

Our Advantage

Hydro International is committed to a policy of continuous product development. Our understanding of integrated water management ensures that sustainable site-specific solutions set the standards.

To ensure that research outputs are of the highest quality, Hydro International utilises state-of-the-art testing technology and analytical techniques both in-house and through independent centres of excellence.

Contact us Today

To learn more about the Hydro-Brake® Chamber, the Hydro-Brake® Flow Control or any of our other stormwater products, call us at 01275 337937 or visit us on-line at www.hydro-international.biz.

We look forward to working with you.

www.hydro-international.biz

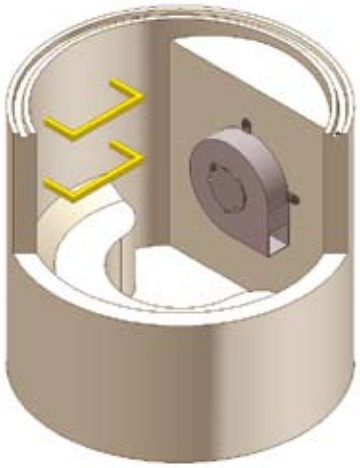

Stormwater Division
Shearwater House • Clevedon Hall Estate
Victoria Road • Clevedon • BS21 7RD
Tel: 01275 878371 • Fax: 01275 874979

United Kingdom
Hydro International
Water & Wastewater Division
Prickwillow Road
Ely
Cambridgeshire
CB7 4TX

Tel: +44 (0) 1353 645700
Fax: +44 (0) 1353 645702

Ireland
HRD Technologies Ltd
Tootenhill House
Rathcoole
Co Dublin
Ireland

Tel: +353 (0) 1 4013964
Fax: +353 (0) 1 4013978

United States
Hydro International
94 Hutchins Drive
Portland
ME 04102

Tel: 207 756 6200
Fax: 207 756 6212

Hydro International

HBCUM A/1106

Certificate No. 961366